PROJECT INFORMATION

OWNER:	EDWARD & CATHERINE MORAN 4882 FOREST AVENIE SE MERCER ISLAND, WA 98040 PHONE: (206) 288-9650 edmoran82@gmail.com
DESIGNER:	PLAN ONE 1501 DAYTON COURT NE RENTON, WA. 98056-2766 PHONE: (206) 612-8511 CONTACT: WILLIAM M. GOTTLIEB wmgottliebMoran Mlone.biz
STRUCTURAL ENGINEER	KIA CO CONSULTING STRUCTURAL ENGINEERS P.O BOX 7255 BELLEVUE, WA 98008 PHONE: (425) 351-5999 CONTACT: ALI GASSIMIKIA kiaeng.ali@gmail.com
CONTRACTOR:	RAINIER CUSTOM HOMES, LLC. 306 WELLS AVENUE SE RENTON, WA 98057 PHONE: (206) 513-4242 CONTACT: NEVIN MIDDLETON PreCon@rainiercustomhomes.com RAINICH852K1
GEOTECHNICAL ENGINEER	NELSON GEOTECHNICAL ASSOCIATES 17311 135TH AVENUE NE SUITE A-500 WOODINVILLE, WA 98072 (425) 486-1669 CONTACT: KHAL SHAWISH khals@nelsongeotech.com
CIVIL ENGINEER	JMJ TEAM-JUSTIN JONES, PE P.O. BOZ 2066 SUMNER, WA 98390 (206) 596-2020 CONTACT: JUSTIN JONES justin@jmjteam.com
ARBORIST	TREE SOLUTIONS 2940 WESTLAKE AVENUE N SEATTLE, WA 98109 (206) 528-4670 CONTACT: JOSH PETTER josh@treesolutions.net
PLAN REVIEW:	CITY OF MERCER ISLAND
INSPECTION:	CITY OF MERCER ISLAND

DESIGN CRITERIA

JURISDICTION:	CITY OF MERCER ISLAND, WA
LEGAL DESCRIPTION:	THAT PORTION OF THE SOUTH HALF OG THE NORTHWEST QUARTER OF THE NORTHWEST QUARTER OF SECTION 19, TOWNSHIP 24 NORTH, RANGE 5 EAST, W.M. DESCRIBED AS FOLLOWS: BEGINNING ON THE EAST LINE OF SAID SUBDIVISION, DISTANT NORTH 00^ 02' 27" WEST MERCER WAY AND THE POINT OF BEGINNING, THENCE SOUTH 89^ 24' 27" EAST 115 FEET; THENCE NORTH 00^ 35' 33" EAST 150 FEET; THENCE NORTH 89^ 24' 27" WEST 107.05 FEET, MORE OR LESS, TO SAID EAST LINE OF WEST MERCER WAY; THENCE SOUTHERLY ALONG SAID LINE 150 FEET, MORE OR LESS TO THE TRUE POINT OF BEGINNING; SITUATE IN THE COUNTY OF KING, STATE OF WASHINGTON.
PROPERTY ADDRESS:	2058 WEST MERCER WAY MERCER ISLAND, WA 98040
TAX PARCEL NO:	192405-9244
EXISTING ZONING:	R-15
GROSS LOT AREA:	18,295 SQ. FT. (0.42 ACRE)
NET LOT AREA:	16,865 SQ. FT. (0.39 ACRE)
BUILDING CODES:	2018 IRC 2018 WSEC
CONSTRUCTION TYPE:	VB
OCCUPANCY TYPE:	R-3 ONE FAMILY DWELING
LOT WIDTH:	115.08' PER MICC 19.16

FIRE PROTECTION NOTE

THE STRUCTURE IS TO BE PROVIDED WITH AN AUTOMATIC FIRE SPRINKLER SYSTEM MEETING THE REQUIREMENTS OF NFPA 13R AND ALSO A MONITORED HOUSEHOLD FIRE ALARM PER NFPA 72

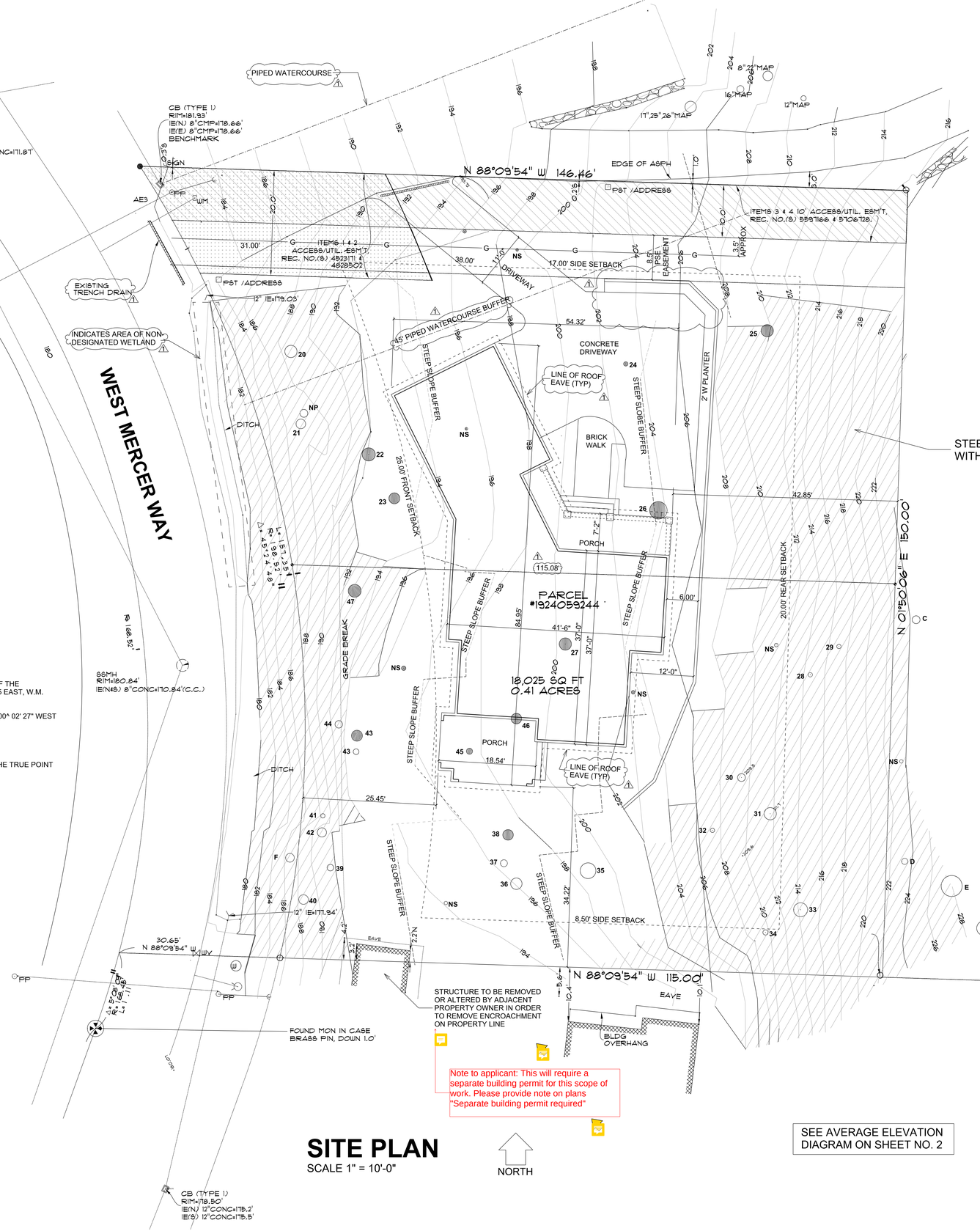

Note to applicant: This will require a separate building permit for this scope of work. Please provide note on plans "Separate building permit required"

SITE PLAN

SCALE 1" = 10'-0"

NORTH

SEE AVERAGE ELEVATION DIAGRAM ON SHEET NO. 2

SEE ARBORIST REPORT AND TREE SURVEY PLAN DATED SEPTEMBER 24, 2021 BY TREE SOLUTIONS, INC.FOR INFORMATIOM ON TREES TO BE RETAINED AND REMOVED

- ASPHALT SURFACE
- BUILDING
- CENTERLINE ROW
- CULVERT PIPE
- DITCH (FLOWLINE)
- FIRE HYDRANT
- GUY ANCHOR
- CATCH BASIN (TYPE 1)
- MONUMENT IN CASE (FOUND)
- POST
- POWER (OVERHEAD)
- POWER POLE
- IRON PIPE (FOUND)
- REBAR & CAP (SET)
- ROCKERY
- SEWER LINE
- SEWER MANHOLE
- STORM DRAIN LINE
- SIZE TYPE — TREE (AS NOTED)
- WATER MH
- WATER LINE
- WATER METER
- WATER VALVE
- STEEP SLOPE AREA
- ITEMS 1 & 2 ACCESS/UTIL. ESM'T, REC. NO.(S) 4523171 & 4828502
- ITEMS 3 & 4 10' ACCESS/UTIL. ESM'T. REC. NO.(S) 5597166 & 5706728.

GREENSCAPE CALCULATIONS

TOTAL AREA OF FRONT SETBACK = 1300.0 SQ. FT.

HARDSCAPE = 452.0 SQ. FT.

GREENSCAPE = 848.0 SQ. FT.

% OFGREENSCAPE IN FRONT SETBACK = 65.2 %

SHEET INDEX

REVISIONS		
DATE	BY	REVISION
12/08/2022		

PROPOSED NEW RESIDENCE FOR:

EDWARD & CATHERINE MORAN

5028 WEST MERCER WAY MERCER ISLAND, WA 98040

PLAN ONE
FINE HOME DESIGN
5125 47th Avenue S
Seattle, Washington 98118
(206) 612-8511 www.planone.biz

DRAWN BY: WMG

DATE: APRIL 25, 2022

PLAN NO.

SHEET NO. 1

MARK	ELEVATIION	WALL LENGTH	ELEV X LENGTH
A	195.27	22.00'	4295.94
B	198.00	25.00'	4950.00
C	199.70	10.00'	1997.00
D	202.21	19.00'	3841.99
E	205.00	26.00'	5330.00
F	204.57	6.00'	1227.42
G	203.10	18.00'	3655.80
H	201.27	17.00'	3421.59
I	199.80	8.50'	1698.30
J	196.71	16.00'	3147.36
K	196.67	2.00'	393.34
L	196.67	2.50'	491.68
M	196.89	11.00'	2165.79
N	197.04	2.50'	492.60
O	195.47	13.50'	2638.85
P	196.89	2.50'	492.23
Q	195.47	23.25'	4544.68
R	193.72	26.58'	5149.08
TOTALS		251.33	49933.43

AVERAGE ELEVATION FORMULA = 49933.43 / 251.33

AVERAGE ELEVATION = 198.68

AVERAGE ELEVATION DIAGRAM

SCALE 1" = 10'-0"

NORTH

DATE	BY	REVISIONS

PROPOSED NEW RESIDENCE FOR:

EDWARD & CATHERINE MORAN

WEST MERCER WAY MERCER ISLAND, WA 98040

PLAN ONE
FINE HOME DESIGN
5125 47th Avenue S
Seattle, Washington 98118
(206) 612-8511 www.planone.biz

DRAWN BY WMG

DATE APRIL 25, 2022

PLAN NO.

SHEET NO. 2

FIRE BLOCKING NOTES

PROVIDE FIRE BLOCKING PER 2018 IRC AND/OR AS FOLLOWS:

a) IN CONCEALED SPACES OF STUD WALLS AND PARTITIONS, INCLUDING FURRED SPACES , AT THE CEILING AND FLOOR LEVELS AND AT 10' I NTERVALS BOTH VERTICAL AND HORIZONTAL.

b) AT ALL INTERCONNECTIONS BETWEEN CONCEALED VERTICAL AND HORIZONTAL SPACES SUCH AS OCCUR AT SOFFITS, DROP CEILINGS AND COVE CEILINGS.

c) IN CONCEALED SPACES BETWEEN STAIR STRINGERS AT THE TOP AND BOTTOM OF THE RUN AND BETWEEN STUDS ALONG AND IN LINE WITH THE RUN OF STAIRS

d) IN OPENINGS AROUND VENTS, PIPES, DUCTS, CHIMNEYS, FIREPLACES AND SIMILAR OPENINGS THAT AFFORD A PASSAGE FOR FIRE AT FLOOR AND CEILING LEVELS, WITH NON-COMUSTIBLE MATERIALS.

e) AT OPENINGS BETWEEN ATTIC SPACES AND CHIMNEY CHASES FOR FACTORY BUILT CHIMNEYS.

INDOOR AIR QUALITY

1. VENTILATION PER IRC M1507
2. ALL EXHAUST DUCTS TO MEET REQUIREMENTS
3. SOURCE SPECIFIC VENTILATION CONTROLLED BY MANUAL SWITCHES AND/OR TIMERS
4. PROVIDE VENTILATION CONTROLS PER IRC M1507.3.2
5. VENTILATION REQUIREMENTS PER IRC M1507.3.3. FLOOR AREA = 2585 SF, 3 BEDROOMS = 60 CFM AIRFLOW REQUIRED (4) PANASONIC FV-0KF32S1 FRESH AIR INLETS @ 18 CFM= 72 CFM PROVIDED
6. WHOLE HOUSE VENTILATION TO BE PROVIDED BY LOCAL EXHAUST FAN PER IRC M1507.3.4. WHOLE HOUSE FAN TO BE ENERGY EFFICIENT AT .35 WATTS PER CFM.

FLOOR PLAN NOTES

WHEN AND WHERE APPLICABLE

1. EXTERIOR WALL FRAMING TO BE 2 X 6 NO.2 HF STUDS AT 16" OC U.N.O.
2. INTERIOR WALL FRAMING TO BE 2 X 4 NO. 2 HF STUDS AT 16" OC U.N.O.
3. INTERIOR WALL FINISH TO BE 1/2" GYPSUM BOARD U.N.O.
4. ALL FRAMING HARDWARE TO BE "SIMPSON" OR EQUAL.
5. EXTERIOR WALL SHEATHING TO BE 7/16" OSB APA RATED PANELS. PROVIDE BLOCKING AND 8d NAILS AT 6" OC AT ALL PANEL EDGES U.N.O. NAILING TO TOP PLATE OR TOENAILING TO JOISTS SHALL BE 8d NAILS AT 6" OC OR TO CONCRETE WITH 5/8" DIAMETER ANCHOR BOLTS AT 4'-0" OC U.N.O.
6. CRAWL SPACE OR ATTIC ACCESS HATCH TO BE INSULATED TO TO THE SAME VALUE AS THAT OF THE SURFACE IN WHICH IT IS LOCATED AND WEATHERSTRIPPED.
7. INSULATE PER PLAN AND SECTIONS.
8. ALL HEADERS AND BEAMS TO BE (2) 2 X 8 U.N.O.
9. ALL POSTS AND COLUMNS SHALL BE DOUBLE STUD MINIMUM U.N.O. WITH THE BEAM OR HEADER BEARING FULLY ON THE POST OR COLUMN.
10. FLOOR SHEATHING SHALL BE 23/32" 'STURD-I-FLOOR' WITH A PANEL INDEX OF 40/20. NAIL TO FRAMING WITH 8d COMMON NAILS AT 4" OC AT PANEL EDGES AND 12" OC IN THE FIELD U.N.O.
11. ALL ANCHOR BOLTS AT FOUNDATION SILL SHALL HAVE MIN 3" X 3" X 1/4" PLATE WASHERS.
13. INSULATE ABOVE GRADE EXTERIOR 2 X 6 WALLS TO MIN R-21
14. INSULATE ABOVE GRADE EXTERIOR 2 X 4 WALLS TO MIN R-13
15. INSULATE BELOW GRADE EXTERIOR WALLS TO MIN R-21 ON THE EXTERIOR OR R-21 ON THE INTERIOR.
16. INSULATE CEILINGS WITH ATTIC SPACE ABOVE TO MIN R-49
17. INSULATE CEILINGS AT SLOPED AREAS TO MIN R-3
18. INSULATE CEILINGS AT UNHEATED SLOPED AREAS TO MIN R-30
19. INSULATE FLOORS ABOVE UNHEATED AREAS TO MIN R-30
20. EXTERIOR DOORS TO BE MIN 'U' VALUE OF 0.20
21. VERTICAL GLAZING TO BE MIN 'U' VALUE OF 0.28
22. HORIZONTAL GLAZING TO BE MIN 'U' VALUE OF 0.50
23. WALL FINISH AT TUB AND/OR SHOWER SURROUNDS TO EXTEND A MIN OF 6'-0" ABOVE FIN FLR.
24. ALL OVERHEAD GLAZING TO BE OF TEMPERED SAFETY GLASS (TSG)
25. SMOKE DETECTORS TO BE HARD WIRED WITH BATTERY BACK-UP
26. WHERE OPERABLE WINDOWS ARE MORE THAN 6'-0" ABOVE OUTSIDE GRADE THE OPENABLE PORTION OF THE WINDOW TO BE MINIMUM OF 2'-0" ABOVE THE INTERIOR WALKING SURFACE PER R613.2
27. WATERPROOF DECKS TO BE SLOPED AT 1/4" PER FT AS INDICATED.
28. PROVIDE HIGH EFFICIENCY LIGHTING CONTROLS FOR ALL EXTERIOR LIGHTING PER WSEC 505.3, CH 2.
29. A MINIMUM OF 75% OF LUMINAIRES MUST BE HIGH EFFICACY LUMINAIRES.
30. PROVIDE APPROVED CARBON MONOXIDE DETECTOR OUTSIDE EACH SEPARATE SLEEPING AREA IN THE IMMEDIATE VICINITY OF THE BEDROOMS AND ON EACH LEVEL OF THE DWELLING.
31. FASTENERS, INCLUDING NUTS AND WASHERS, IN CONTACT WITH PRESERVATIVE-TREATED WOOD SHALL BE OF HOT-DIPPED ZINC-COATED GALVANIZED STEEL, STAINLESS STEEL, SILICON BRONZE OR COPPER.
32. GUARDRAIL TO SUPPORT 200 LB CONCENTRATED LOAD ON TOP AND 50 PSF ON INFILL COMPONENTS (TYP)

CRAWL SPACE VENTILATION

EXISTING CRAWL SPACE

AREA TO BE VENTED	1225 SQ. FT.
VENTILATION REQUIRED 1225 X 144/300 = 629	593 SQ. IN.
VENTILATION PROVIDED 8" X 14" SCREENED CRAWL SPACE VENTS AT 70% NET EFFECTIVE AREA	78.4 SQ. IN.
8 X 14 X 70% = 78.4 SQ. IN. EA 593/78.4 = 7.6 = MIN (8) VENTS	627.2 SQ. IN.
TOTAL VENTILATION PROVIDED (10 VENTS TOTAL)	784.0 SQ. IN.

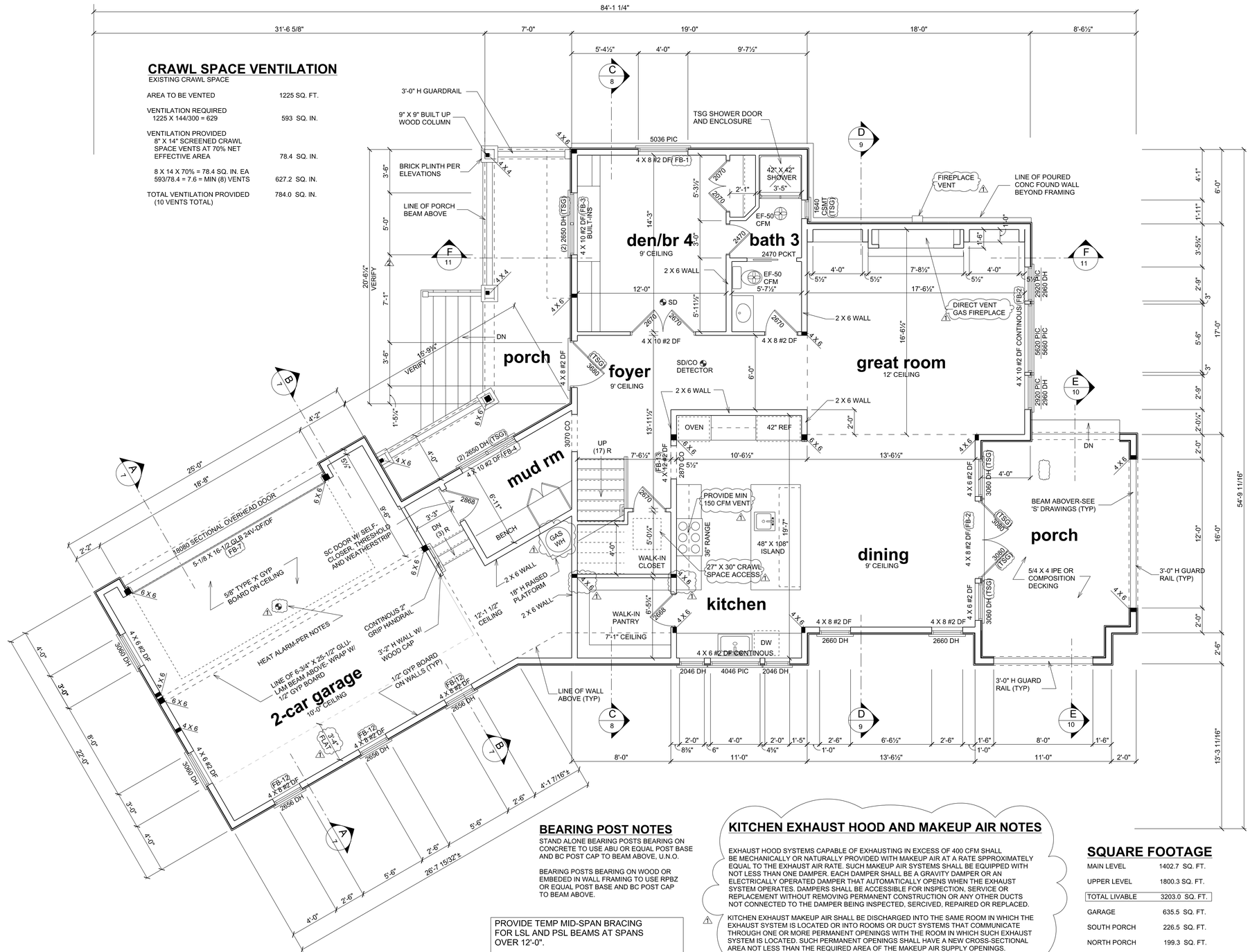

MAIN LEVEL FLOOR PLAN

SCALE 1/4" = 1'-0"

NORTH

BEARING POST NOTES

STAND ALONE BEARING POSTS BEARING ON CONCRETE TO USE ABU OR EQUAL POST BASE AND BC POST CAP TO BEAM ABOVE, U.N.O.

BEARING POSTS BEARING ON WOOD OR EMBEDED IN WALL FRAMING TO USE RPBZ OR EQUAL POST BASE AND BC POST CAP TO BEAM ABOVE.

PROVIDE TEMP MID-SPAN BRACING FOR LSL AND PSL BEAMS AT SPANS OVER 12'-0".

ALL BEARING POSTS TO CONTINUE DOWN TO FOUNDATION EITHER DIRECTLY OR INDIRECTLY THROUGH BEAMS OR HEADERS BELOW

KITCHEN EXHAUST HOOD AND MAKEUP AIR NOTES

EXHAUST HOOD SYSTEMS CAPABLE OF EXHAUSTING IN EXCESS OF 400 CFM SHALL BE MECHANICALLY OR NATURALLY PROVIDED WITH MAKEUP AIR AT A RATE SPPROXIMATELY EQUAL TO THE EXHAUST AIR RATE. SUCH MAKEUP AIR SYSTEMS SHALL BE EQUIPPED WITH NOT LESS THAN ONE DAMPER. EACH DAMPER SHALL BE A GRAVITY DAMPER OR AN ELECTRICALLY OPERATED DAMPER THAT AUTOMATICALLY OPENS WHEN THE EXHAUST SYSTEM OPERATES. DAMPERS SHALL BE ACCESSIBLE FOR INSPECTION, SERVICE OR REPLACEMENT WITHOUT REMOVING PERMANENT CONSTRUCTION OR ANY OTHER DUCTS NOT CONNECTED TO THE DAMPER BEING INSPECTED, SERCIVED, REPAIRED OR REPLACED.

KITCHEN EXHAUST MAKEUP AIR SHALL BE DISCHARGED INTO THE SAME ROOM IN WHICH THE EXHAUST SYSTEM IS LOCATED OR INTO ROOMS OR DUCT SYSTEMS THAT COMMUNICATE THROUGH ONE OR MORE PERMANENT OPENINGS WITH THE ROOM IN WHICH SUCH EXHAUST SYSTEM IS LOCATED. SUCH PERMANENT OPENINGS SHALL HAVE A NEW CROSS-SECTIONAL AREA NOT LESS THAN THE REQUIRED AREA OF THE MAKEUP AIR SUPPLY OPENINGS.

TSG= TEMPERED SAFETY GLASS

SQUARE FOOTAGE

MAIN LEVEL	1402.7 SQ. FT.
UPPER LEVEL	1800.3 SQ. FT.
TOTAL LIVABLE	3203.0 SQ. FT.
GARAGE	635.5 SQ. FT.
SOUTH PORCH	226.5 SQ. FT.
NORTH PORCH	199.3 SQ. FT.

SEE SHEETS NOS. S-1, S-7 & S-8 FOR SHEAR WALL SCHEDULE, PLANS, AND GENERAL NOTES

REVISIONS		
DATE	BY	REVISION
12/08/2022	WMG	

PROPOSED SINGLE FAMILY RESIDENCE FOR:

EDWARD & CATHERINE MORAN

4882 FOREST AVENUE SE MERCER, ISLAND, WA

PLAN ONE
FINE HOME DESIGN
5125 47th Avenue S
Seattle, Washington 98118
(206) 612-8511 www.planone.biz

DRAWN BY: WMG

DATE: APRIL 25, 2022

PLAN NO.

SHEET NO. **3**

ENERGY CODE NOTES

1. EACH DWELLING UNIT IS TO BE PROVIDED WITH AT LEAST ONE PROGRAMMABLE THERMOSTAT FOR THE REGULATION OF TEMPERATURE.

2. BUILDING AIR LEAKEAGE TESTING, DEMONSTRATING THE SPECIFIC LEAKAGE AREA IS LESS THAN OR EQUAL TO 0.3 CFM, IS REQUIRED PRIOR TO FINAL INSPECTION. THE TEST RESULTS SHALL BE POSTED ON THE 'RESIDENTIAL ENERGY COMPLIANCE CERTIFICATE.'

3. DUCT LEAKAGE TEST RESULTS SHALL BE PROVIDED TO THE BUILDING INSPECTOR AND HOMEOWNER PRIOR TO AN APPROVED FINAL INSPECTION.

4. A 'RESIDENTIAL ENERGY COMPLIANCE CERTIFICATE' COMPLYING WITH SEC 105.4 IS REQUIRED TO BE COMPLETED BY THE DESIGN PROFESSIONAL OR BUILDER AND PERMANENTLY POSTED WITHIN 3 FEET OF THE ELECTRICAL PANEL PRIOR TO FINAL INSPECTION.

5. 1.0 ENERGY CREDIT FUEL NORMALIZATION DESCRIPTION:

   (OPTION 1- 1.0 CREDIT) HEAT PUMP

   6.0 ENERGY CREDIT OPTION DESCRIPTIONS:

   (OPTION 1.4 - 1.0 CREDIT) EFFICIENT BUILDING ENVELOPE: VERTICAL FENESTRATION U= 0.25, WALL INSULATION R-21 PLUS R-4, FLOOR R-38, SLAB ON GRADE R-10 PERIMETER AND UNDER ENTIRE SLAB, BELOW GRADE SLAB R-10 PERIMETER AND UNDER ENTIRE SLAB.

   (OPTION 2.2 - 1.0 CREDIT) COMPLIANCE BASED ON SECTION R402.1.2: REDUCE TESTED AIR LEAKAGE TO 2.0 AIR CHANGES PER HOUR MAXIMUM OR 50 PASCALS.

   (OPTION 3.6 - 2.0 CREDITS) DUCTLESS SPLIT SYSTEM HEAT PUMPS WITH NO ELECTRIC RESISTANCE HEATING IN PRIMARY LIVING AREAS. A DUCTLESS HEAT PUMP SYSTEM WITH A MINIMUM HSPF OF 10 SHALL BE SIZED AND INSTALLED TO PROVIDE HEAT TO THE ENTIRE DWELLING UNIT AT THE DESIGN OUTDOOR AIR TEMPERATURE.

   (OPTION 5.2- 0.5 CREDITS) EFFICIENT WATER HEATING: ENERGY STAR RATED GAS, OR PROPANE WATER HEATER WITH A MINIMUM UEF OF 0.80

   (OPTION 7.1- 0.5 CREDITS) APPLIANCE PACKAGE: ALL OF THE FOLLOWING APPLIANCES SHALL BE NEW AND INSTALLED IN THE DWELLING UNIT AND SHALL MEET THE FOLLOWING STANDARDS:
   DISHWASHER - ENERGY STAR RATED
   REFRIGERATOR - ENERGY STAR RATED
   WASHING MACHINE - ENERGY STAR RATED
   DRYER - ENERGY STAR RATED, VETLESS DRYER WITH MINIMUM CFE RATING OF 5.2

6. PER WSEC R403.3, DUCTS, AIR HANDLERS AND FILTER BOXES SHALL BE SEALED AND LEAK TESTED

7. BLOWER DOOR TESTING- AR LEAKAGE SHALL NOT EXCEED 3.0 AIR CHANGES PER HOUR, AND SHALL BE TESTED PER SEC R402.1.2. PROVIDE A WRITTEN REPORT OF THE TEST RESULTS, SIGNED BY THE TESTING PARTY, TO THE BUILDING INSPECTOR, PRIOR TO APPROVED FINAL INSPECTION.

8. THE DESIGN PROFESSIONAL OR BUILDER SHALL COMPLETE AND POST A "INSULATION CERTIFICATE FOR RESIDENTIAL CONSTRUCTION" WITHIN 3 FEET OF THE ELECTRICAL PANEL PRIOR TO FINAL INSPECTION.

9. THE DESIGN PROFESSIONAL OR BUILDER SHALL COMPLETE AND POST A "INSULATION CERTIFICATE FOR RESIDENTIAL CONSTRUCTION" WITHIN 3 FEET OF THE ELECTRICAL PANEL PRIOR TO FINAL INSPECTION.

10. RECESSED CAN LIGHTS ARE TO BE TYPE 1C RATED AND SEALED.

11. PER WEC 402.4, THE BUILDING THERMAL ENVELOPE SHALL BE CONSTRUCTED TO LIMIT AIR LEAKAGE IN ACCORDANCE WITH THE REQUIREMENTS OF SEC R402.1.1 THROUGHT R402.4.4.

12. PER 4403.2.2, DUCTS, AIR HANDLERS AND FILTER BOXES SHALL BE SEALED. JOINTS AND SEAMS SHALL COMPLY WITH EITHER THE IMC OR IRC AS APPLICABLE.

WHOLE HOUSE FAN NOTES

VENTILATION REQUIREMENTS PER IRC M1507.3.3
FLOOR AREA = 3203 SF, 4 BEDROOMS = 90 CFM

1. PROVIDE A CENTRALLY LOCATED WHOLE HOUSE EXHAUST FAN WITH A MINIMUM SONE RATING OF 1.5 AND MINIMUM CAPACITY OF 100CFM AND CONNECTED TO AN AUTOMATIC CONTROL TIMER.

2. AN AUTOMATIC CONTROL CLOCK TIMER SHALL BE INSTALLED IN A READILY ACCESSIBLE LOCATION. THE TIMER SHALL BE CAPABLE OF CONTINOUS OPERATION AND HAVE AN AUTOMATIC AND MANUAL CONTROL. THE TIMER SHALL BE SET TO OPERATE THE WHOLE HOUSE FAN FOR A MINIMUM OF 8 HOURS.

3. INTERIOR DOORS SHALL BE UNDERCUT A MINIMUM OF 1/2" ABOVE THE FINISHED FLOOR.

4. FRESH AIR INTAKE DUCT TO BE MINIMUM 7" DIAMETER SMOOTH PIPE FOR A MAXIMUM LENGTHE OF 20' AND A MAXUMUM OF 3 ELBOWS.

5. FRESH AIR INLET TO BE INSULATED TO A MINIMUM OF R-4 WITHIN HEATED AREAS.

6. FRESH AIR INLET TO BE PROTECTED FROM THE ENTRY OF INSECTS, LEAVES AND OTHER MATERIAL

7. FRESH AIR INLET NOT TO BE LOCATED AS FOLLOWS:
   A. WITHIN 10' OF AN APPLIANCE OUTLET UNLESS THE VENT OUTLET IS A MINIMUM OF 3' ABOVE THE FRESH AIR INLET.
   B. WHERE IT WILL PICK UP OBJECTIONABLE ODORS, FUMES OR FLAMABLE VAPORS.
   C. A HAZARDOUS OR UNSANITARY LOCATION.
   D. A ROOM OR SPACE HAVING FUEL BURNING APPLIANCES WITHIN.
   E. CLOSER THAN 10' FROM A VENT OPENING OF A PLUMBING DRAINAGE SYSTEM UNLESS THE VENT OPENING IS AT LEAST 3' ABOVE THE FRESH AIR INLET.
   F. IN AN ATTIC, CRAWL SPACE OR GARAGE.

4. THE EXHAUST DUCT SHALL TERMINATE OUTSIDE THE BUILDING AND BE EQUIPPED WITH A BACK-DRAFT DAMPER. THE EEXHAUST DUCT IN UNCONDITIONED SPACES SHALL BE INSULATED TO A MINIMUM OF R-4.

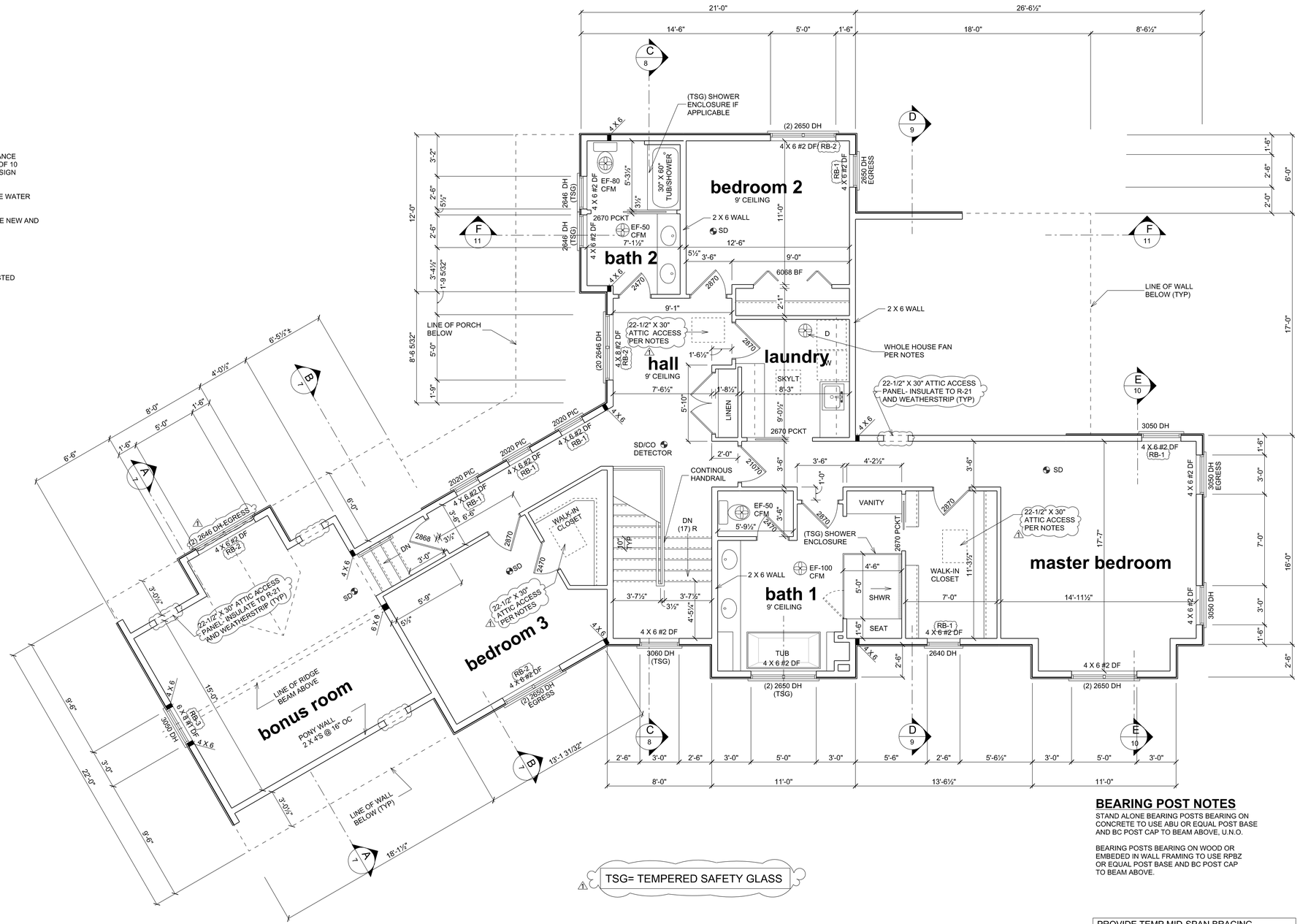

UPPER LEVEL FLOOR PLAN

SCALE 1/4" = 1'-0"

NORTH

BEARING POST NOTES

STAND ALONE BEARING POSTS BEARING ON CONCRETE TO USE ABU OR EQUAL POST BASE AND BC POST CAP TO BEAM ABOVE, U.N.O.

BEARING POSTS BEARING ON WOOD OR EMBEDED IN WALL FRAMING TO USE RPBZ OR EQUAL POST BASE AND BC POST CAP TO BEAM ABOVE.

PROVIDE TEMP MID-SPAN BRACING FOR LSL AND PSL BEAMS AT SPANS OVER 12'-0".

ALL BEARING POSTS TO CONTINUE DOWN TO FOUNDATION EITHER DIRECTLY OR INDIRECTLY THROUGH BEAMS OR HEADERS BELOW

SEE SHEETS NOS. S-1, S-7 & S-8 FOR SHEAR WALL SCHEDULE, PLANS, AND GENERAL NOTES

REVISIONS		
DATE	BY	REVISION
12/08/2022	WMG	

PROPOSED SINGLE FAMILY RESIDENCE FOR:
EDWARD & CATHERINE MORAN
4882 FOREST AVENUE SE MERCER, ISLAND, WA

PLAN ONE
FINE HOME DESIGN
5125 47th Avenue S
Seattle, Washington 98118
(206) 612-8511 www.planone.biz

DRAWN BY: WMG
DATE: APRIL 25, 2022
PLAN NO.
SHEET NO. **4**

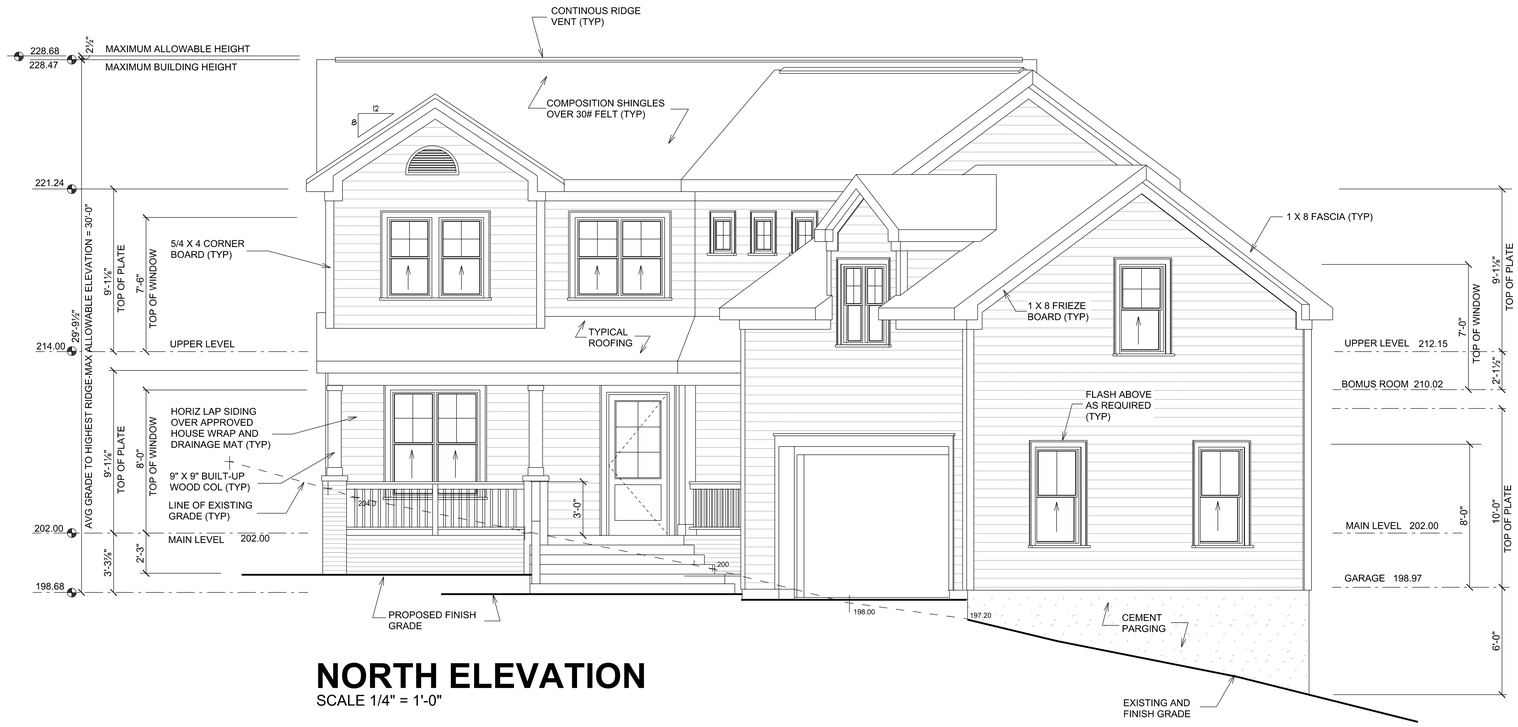

NORTH ELEVATION

SCALE 1/4" = 1'-0"

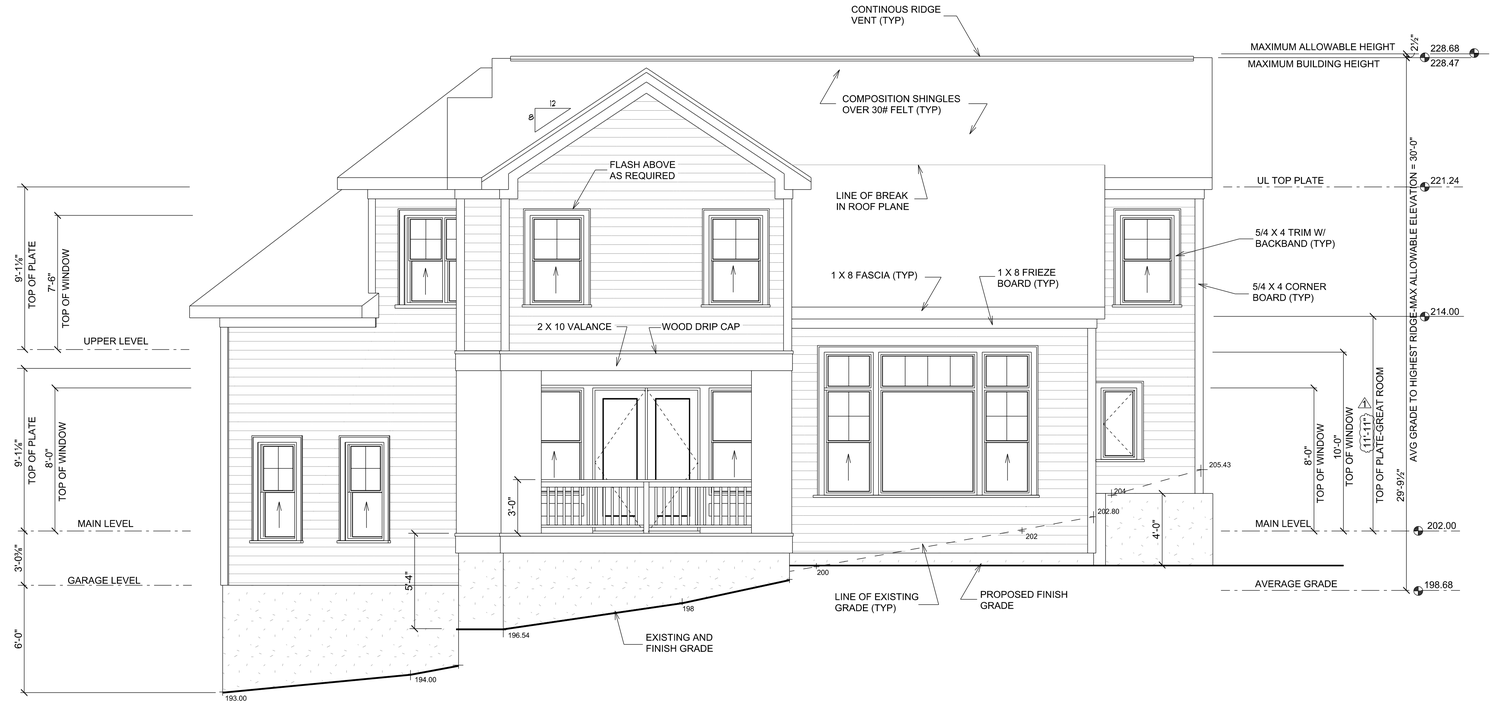

SOUTH ELEVATION

SCALE 1/4" = 1'-0"

REVISIONS		
DATE	BY	REVISION △1
12/08/2022		

PROPOSED SINGLE FAMILY RESIDENCE FOR:

EDWARD & CATHERINE MORAN

4882 FOREST AVENUE SE MERCER, ISLAND, WA

PLAN ONE
FINE HOME DESIGN
5125 47th Avenue S
Seattle, Washington 98118
(206) 612-8511 www.planone.biz

DRAWN BY WMG

DATE APRIL 25, 2022

PLAN NO.

SHEET NO. 5

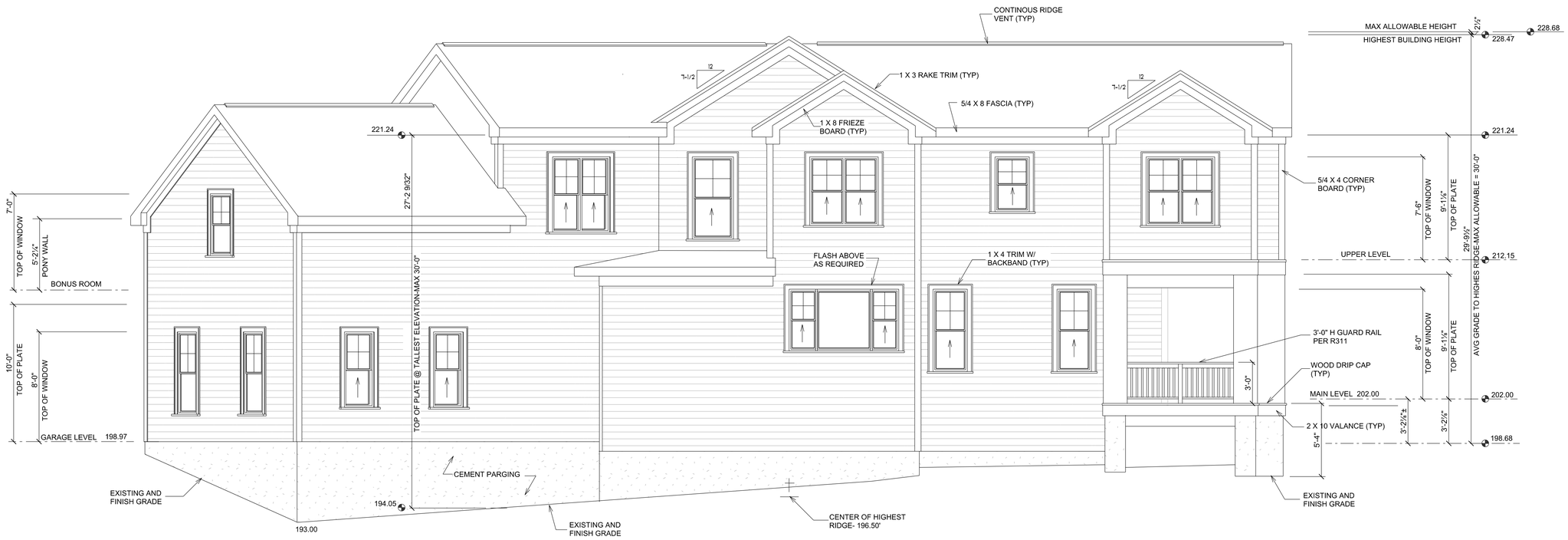

WEST ELEVATION

SCALE 3/8" 1'-0"

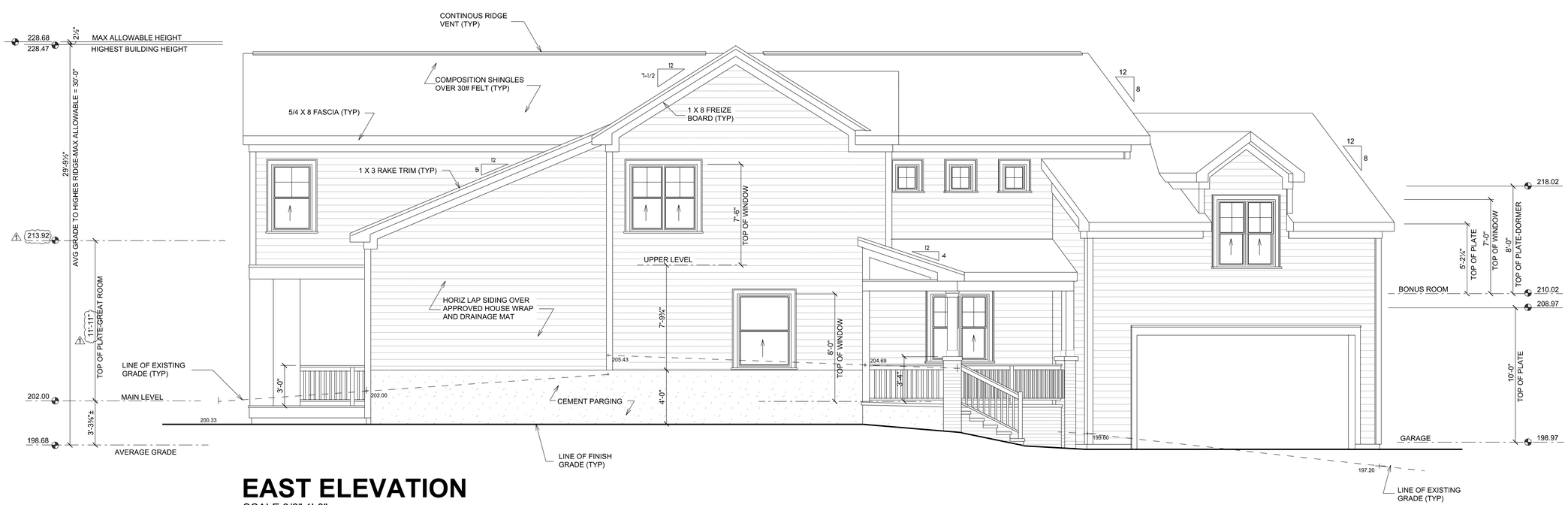

EAST ELEVATION

SCALE 3/8" 1'-0"

REVISIONS

DATE	BY	REVISION ⚠
12/08/2022		

PROPOSED SINGLE FAMILY RESIDENCE FOR:

EDWARD & CATHERINE MORAN

4882 FOREST AVENUE SE MERCER, ISLAND, WA

PLAN ONE
FINE HOME DESIGN
5125 47th Avenue S
Seattle, Washington 98118
(206) 612-8511 www.planone.biz

DRAWN BY: WMG

DATE: APRIL 25, 2022

PLAN NO.

SHEET NO. **6**

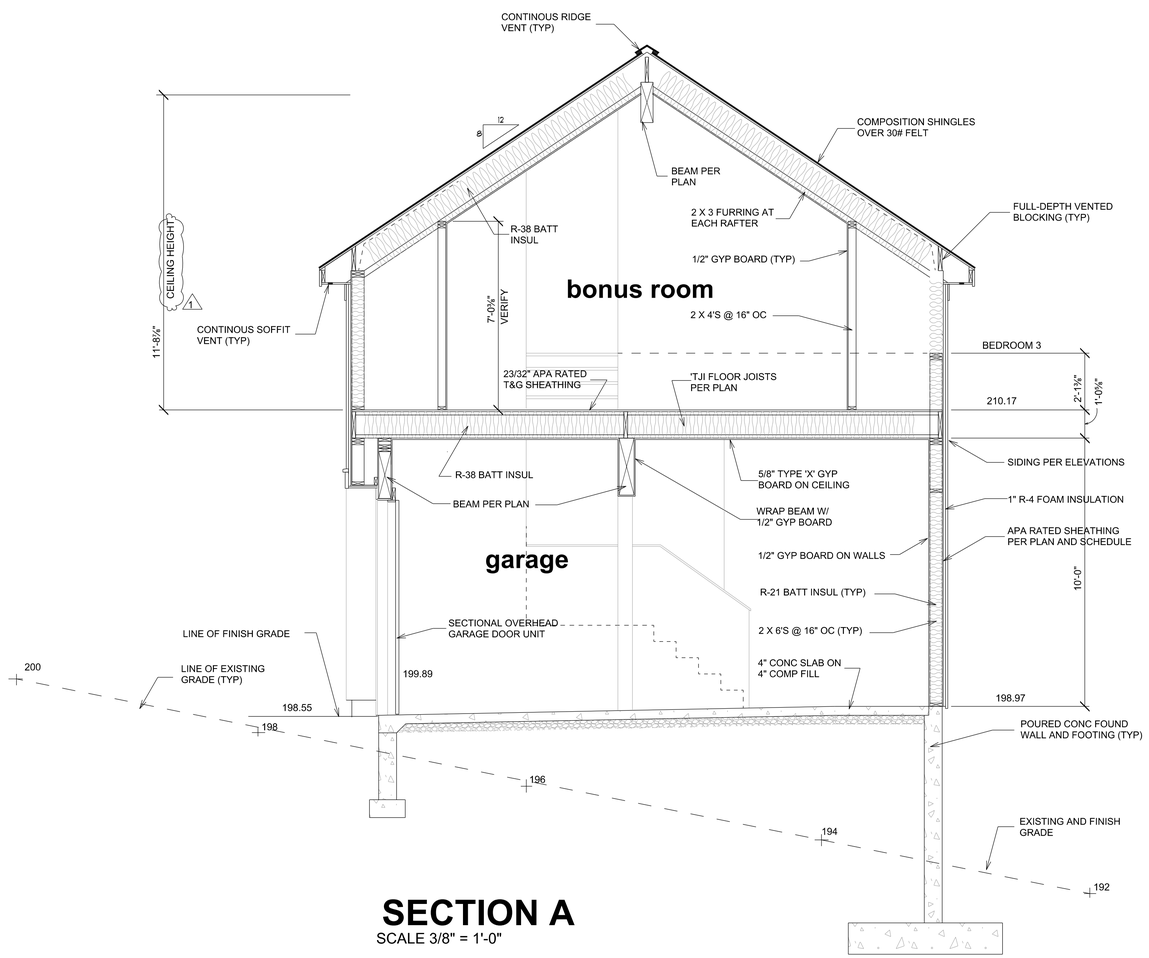

SECTION A

SCALE 3/8" = 1'-0"

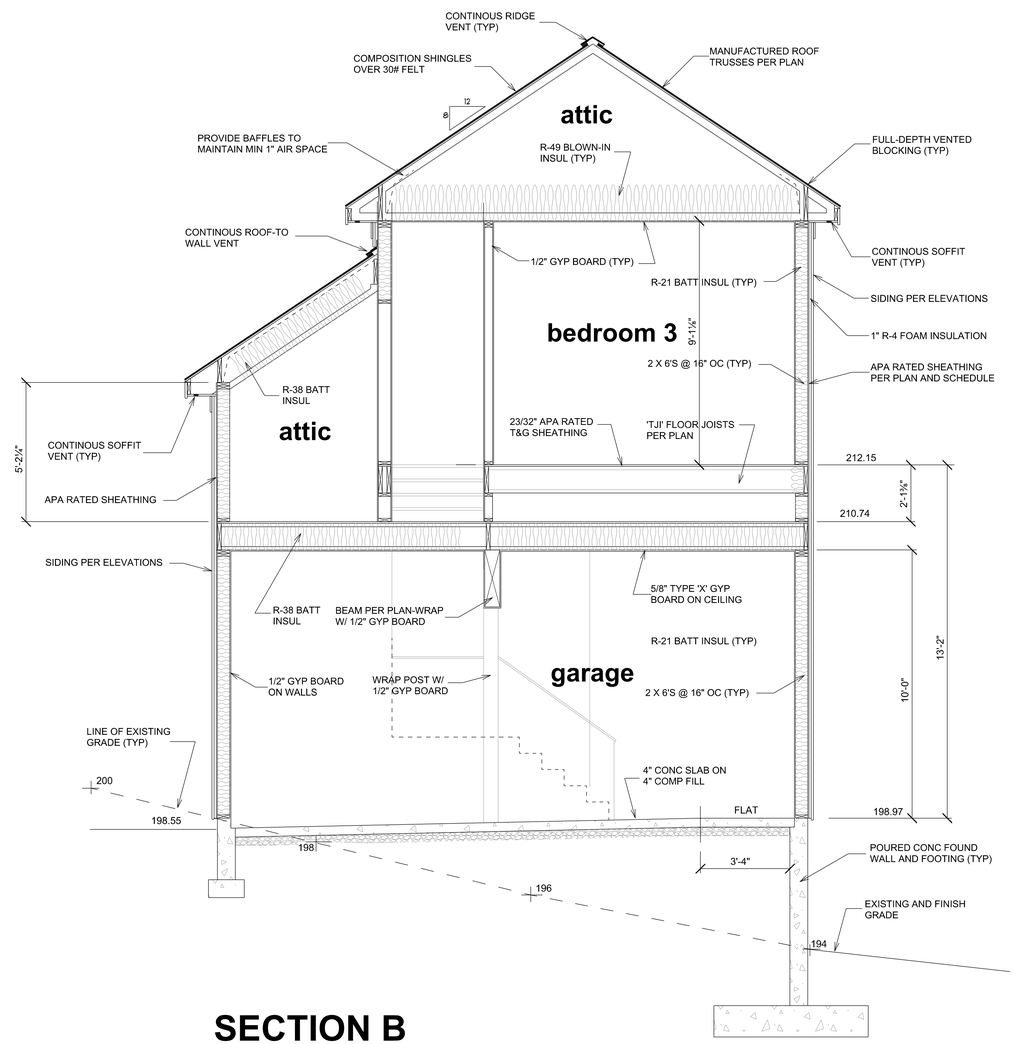

SECTION B

SCALE 3/8" = 1'-0"

REVISIONS

DATE	BY	REVISION
12/08/2022		REVISION 1

PROPOSED SINGLE FAMILY RESIDENCE FOR:

EDWARD & CATHERINE MORAN

4882 FOREST AVENUE SE MERCER, ISLAND, WA

PLAN ONE
FINE HOME DESIGN
5125 47th Avenue S
Seattle, Washington 98118
(206) 612-3511 www.planone.biz

DRAWN BY WMG

DATE APRIL 25, 2022

PLAN NO.

SHEET NO. 7

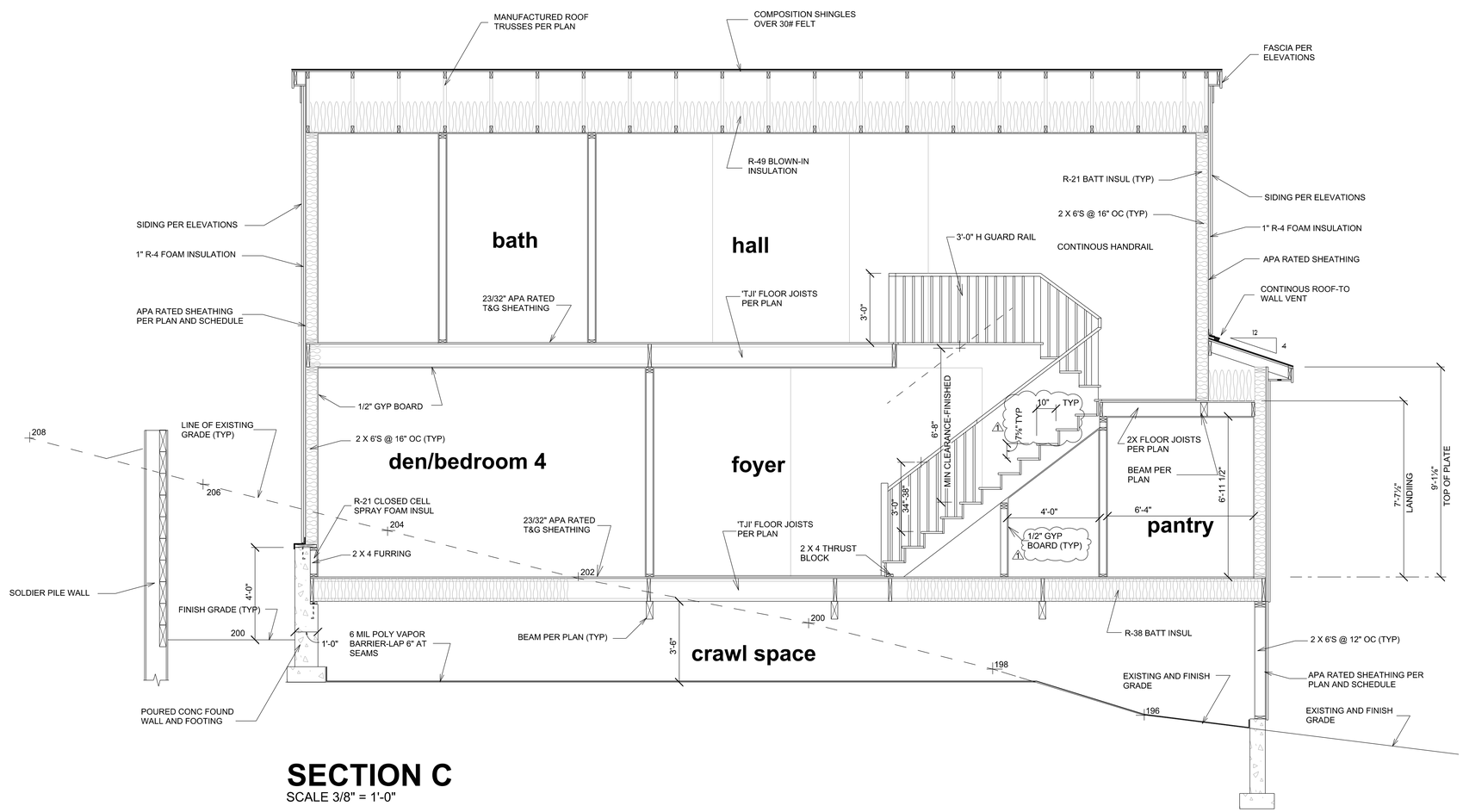

SECTION C

SCALE 3/8" = 1'-0"

REVISIONS

DATE	BY	REVISION ⚠
12/08/2022	WMG	

PROPOSED SINGLE FAMILY RESIDENCE FOR:

EDWARD & CATHERINE MORAN

4882 FOREST AVENUE SE MERCER, ISLAND, WA

PLAN ONE
FINE HOME DESIGN
5125 47th Avenue S
Seattle, Washington 98118
(206) 612-8511 www.planone.biz

DRAWN BY WMG

DATE APRIL 25, 2022

PLAN NO.

SHEET NO. 8

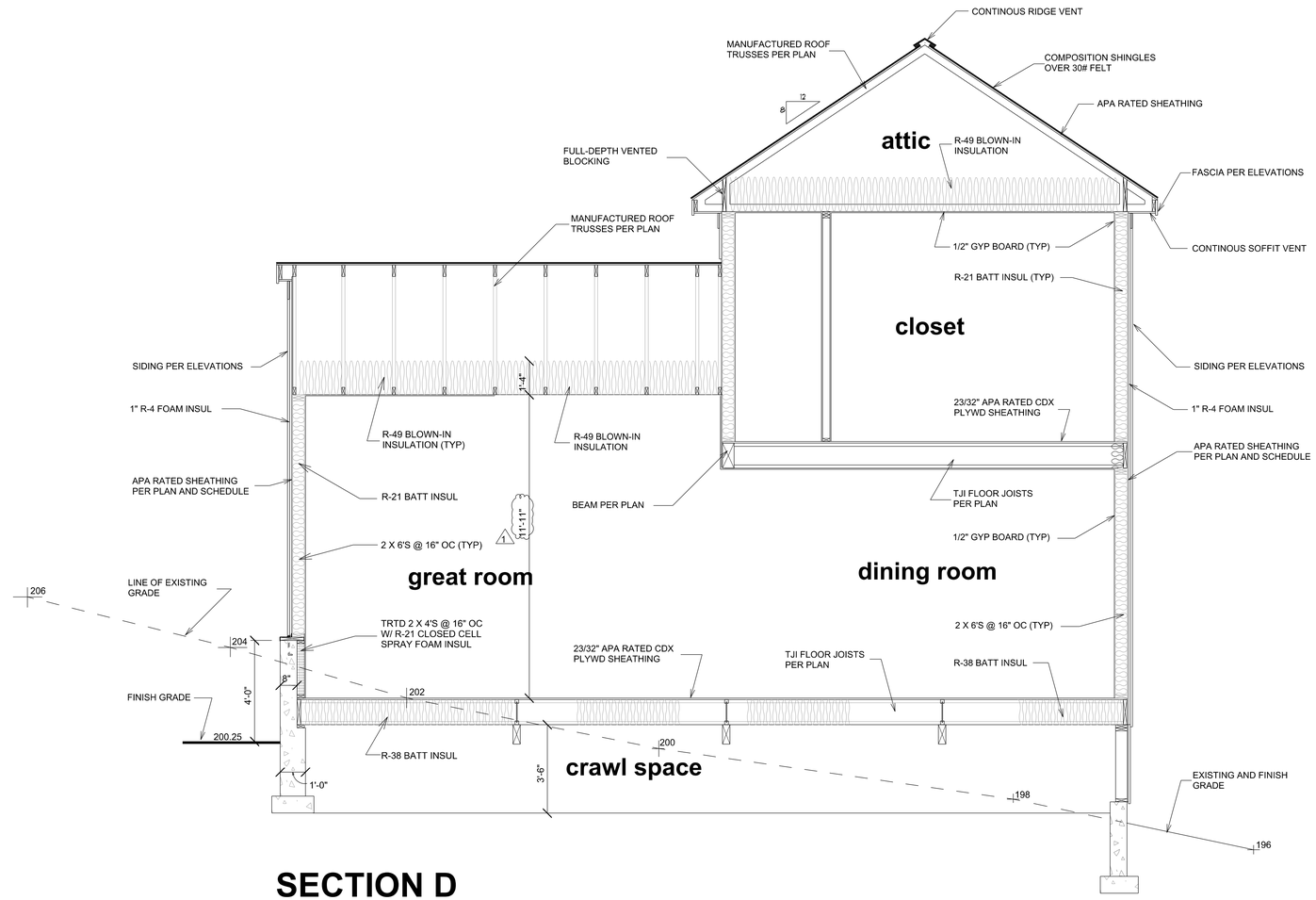

SECTION D

SCALE 3/8" = 1'-0"

REVISIONS		
DATE	BY	REVISION 1
12/08/2022		

PROPOSED SINGLE FAMILY RESIDENCE FOR:

EDWARD & CATHERINE MORAN

4882 FOREST AVENUE SE MERCER, ISLAND, WA

PLAN ONE
FINE HOME DESIGN
5125 47th Avenue S
Seattle, Washington 98118
(206) 612-8511 www.planone.biz

DRAWN BY
WMG

DATE
APRIL 25, 2022

PLAN NO.

SHEET NO.
9

GLAZING SCHEDULE:

ALL GLAZING TO BE NEW, INSULATED, LOW E-366 GLASS. 'U' VALUES SHOWN ARE NFRC CERTIFIED VALUES.
ALL DOOR GLAZING AND GLAZING WITHIN 2'-0" OF AN EXTERIOR DOOR SHALL BE TEMPERED SAFETY GLASS.

TOTAL CONDITIONED FLOOR AREA = 3203.0 SQ. FT.
TOTAL GLAZING AREA = 817.3 SQ. FT. = 19.2 %
AREA WEIGHTED AVERAGE 'U' VALUE = 0.280

ROOM	DESCRIPTION	UNIT SIZE	SQUARE FT.	QUANTITY	TOTAL SQ. FT.	'U'	TOTAL 'U'	COMMENTS
FOYER	SIMPSON 5001 INSUL GL 1 LITE FRENCH DOOR	3'-6" X 8'-0"	28.0	1	28.0	0.25	7.0	TEMPERED SG
DEN/BEDROOM 4	JELD-WEN PREMIUM INSULATED VINYL DOUBLE HUNG WINDOW	2'-6" X 5'-0"	12.5	2	25.0	0.25	6.3	LOW E-366 GLASS-TEMPERED SAFETY GLASS
	JELD-WEN PREMIUM INSULATED VINYL FIXED WINDOW	5'-0" X 3'-6"	17.5	1	17.5	0.25	4.4	LOW E-366 GLASS
BATHROOM 3	JELD-WEN PREMIUM INSULATED VINYL CASEMENT WINDOW	1'-6" X 4'-0"	6.0	1	6.0	0.25	1.5	LOW E-366 GLASS-TEMPERED SAFETY GLASS
LIVING ROOM	JELD-WEN PREMIUM INSULATED VINYL DOUBLE HUNG WINDOW	2'-9" X 6'-0"	16.5	2	33.0	0.25	8.3	LOW E-366 GLASS
	JELD-WEN PREMIUM INSULATED VINYL FIXED WINDOW	5'-6" X 6'-0"	33.0	1	33.0	0.25	8.3	LOW E-366 GLASS
	JELD-WEN PREMIUM INSULATED VINYL FIXED WINDOW	2'-9" X 2'-0"	5.5	2	11.0	0.25	2.8	LOW E-366 GLASS
	JELD-WEN PREMIUM INSULATED VINYL FIXED WINDOW	5'-6" X 2'-0"	11.0	1	11.0	0.25	2.8	LOW E-366 GLASS
DINING ROOM	SIMPSON 5001 INSUL GL 1 LITE FRENCH DOOR	6'-0" X 8'-0"	48.0	1	48.0	0.25	12.0	LOW E-366 GLASS-DOUBLE HUNG-TEMPERED SAFETY GLASS
	JELD-WEN PREMIUM INSULATED VINYL DOUBLE HUNG WINDOW	3'-0" X 6'-0"	18.0	2	36.0	0.25	9.0	LOW E-366 GLASS-TEMPERED SAFETY GLASS
	JELD-WEN PREMIUM INSULATED VINYL DOUBLE HUNG WINDOW	2'-6" X 6'-0"	15.0	2	30.0	0.25	7.5	LOW E-366 GLASS
KITCHEN	JELD-WEN PREMIUM INSULATED VINYL DOUBLE HUNG WINDOW	2'-0" X 4'-6"	9.0	2	9.0	0.25	2.3	LOW E-366 GLASS
	JELD-WEN PREMIUM INSULATED VINYL FIXED WINDOW	4'-0" X 4'-6"	18.0	1	18.0	0.25	4.5	LOW E-366 GLASS
MUD ROOM	JELD-WEN PREMIUM INSULATED VINYL DOUBLE HUNG WINDOW	2'-6" X 5-0"	12.5	2	25.0	0.25	6.3	LOW E-366 GLASS-TEMPERED SAFETY GLASS
STAIRWELL	JELD-WEN PREMIUM INSULATED VINYL DOUBLE HUNG WINDOW	3'-0" X 6'-0"	18.0	1	18.0	0.25	4.5	LOW E-366 GLASS-TEMPERED SAFETY GLASS
HALLWAY	JELD-WEN PREMIUM INSULATED VINYL DOUBLE HUNG WINDOW	2'-6" X 4'-6"	11.3	2	22.6	0.25	5.7	LOW E-366 GLASS
	JELD-WEN PREMIUM INSULATED VINYL FIXED WINDOW	2'-0" X 2'-0"	4.0	3	12.0	0.25	2.7	LOW E-366 GLASS
MASTER BEDROOM	JELD-WEN PREMIUM INSULATED VINYL DOUBLE HUNG WINDOW	3'-0" X 5'-0"	15.0	3	45.0	0.25	11.3	LOW E-366 GLASS
	JELD-WEN PREMIUM INSULATED VINYL DOUBLE HUNG WINDOW	2'-6" X 5'-0"	12.5	2	25.0	0.25	6.3	LOW E-366 GLASS
MASTER CLOSET	JELD-WEN PREMIUM INSULATED VINYL DOUBLE HUNG WINDOW	2'-6" X 4'-0"	10.0	1	10.0	0.25	2.5	LOW E-366 GLASS
MASTER BATH	JELD-WEN PREMIUM INSULATED VINYL DOUBLE HUNG WINDOW	2'-6" X 5'-0"	12.5	2	25.0	0.25	6.3	LOW E-366 GLASS-TEMPERED SAFETY GLASS
BEDROOM 2	JELD-WEN PREMIUM INSULATED VINYL DOUBLE HUNG WINDOW	2'-6" X 5'-0"	12.5	3	37.5	0.25	9.4	LOW E-366 GLASS
BATHROOM 2	JELD-WEN PREMIUM INSULATED VINYL DOUBLE HUNG WINDOW	2'-6" X 4'-6"	11.3	2	22.6	0.25	5.7	LOW E-366 GLASS-TEMPERED SAFETY GLASS
BEDROOM 3	JELD-WEN PREMIUM INSULATED VINYL DOUBLE HUNG WINDOW	2'-6" X 5'-0"	12.5	2	25.0	0.25	6.3	LOW E-366 GLASS
BONUS ROOM	JELD-WEN PREMIUM INSULATED VINYL DOUBLE HUNG WINDOW	3'-0" X 5'-0"	15.0	1	15.0	0.25	3.8	LOW E-366 GLASS
	JELD-WEN PREMIUM INSULATED VINYL DOUBLE HUNG WINDOW	2'-6" X 4'-6"	11.3	2	22.6	0.25	5.7	LOW E-366 GLASS
LAUNDRY	VELUX INSULATED ROOF WINDOW	2'-0" X 2'-0"	4.0	1	4.0	0.50	2.0	
					614.7		144.4	

NOTE: 4" OPENING LIMIT CONTROL CONFORMING WITH ASTM-F2090

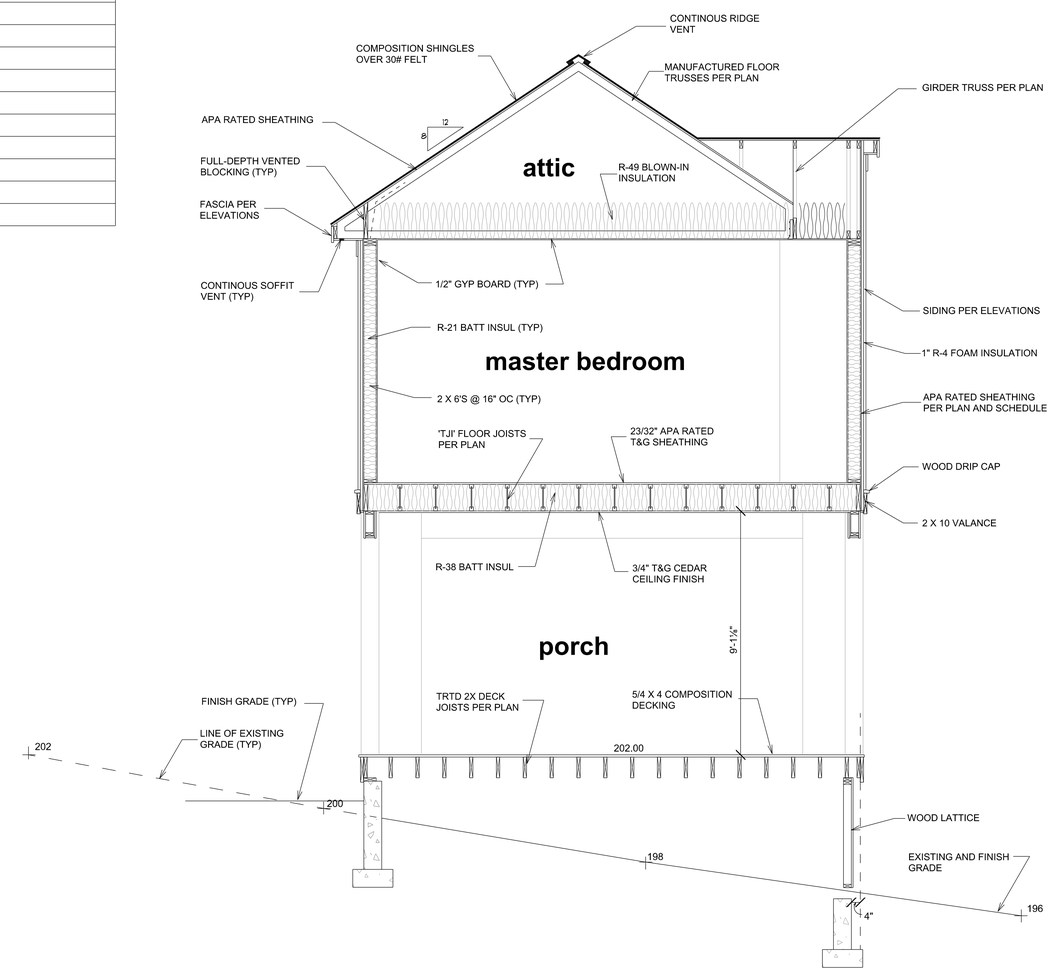

SECTION E

SCALE 3/8" 1'-0"

REVISIONS

DATE	BY	

PROPOSED SINGLE FAMILY RESIDENCE FOR:
EDWARD & CATHERINE MORAN
4882 FOREST AVENUE SE MERCER, ISLAND, WA

PLAN ONE
FINE HOME DESIGN
5125 47th Avenue S
Seattle, Washington 98118
(206) 612-8511 www.planone.biz

DRAWN BY: WMG
DATE: APRIL 25, 2022
PLAN NO.
SHEET NO. **10**

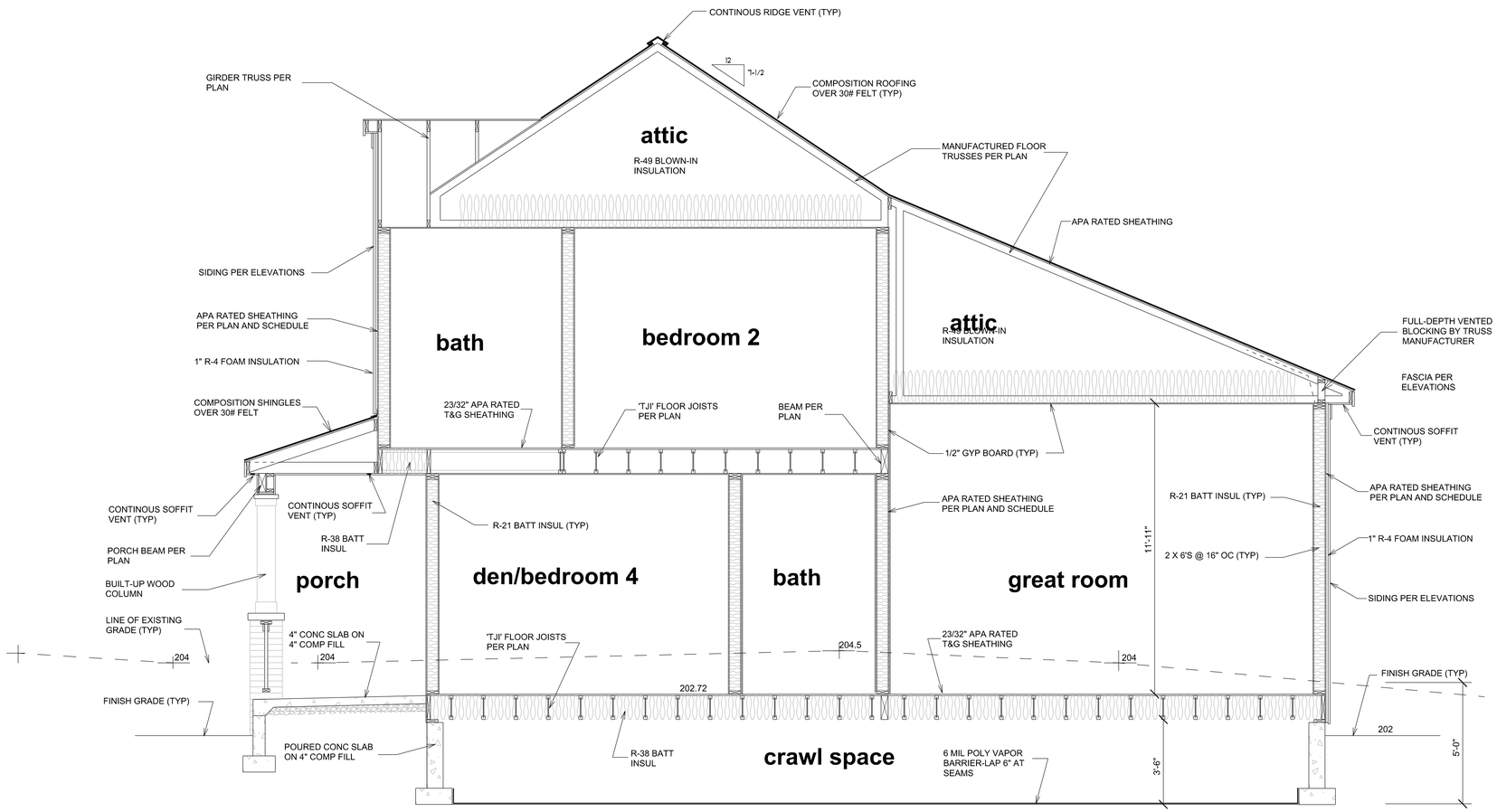

SECTION F

SCALE 3/8" 1'-0"

REVISIONS

DATE	BY

PROPOSED SINGLE FAMILY RESIDENCE FOR:

EDWARD & CATHERINE MORAN

4882 FOREST AVENUE SE MERCER, ISLAND, WA

PLAN ONE
FINE HOME DESIGN
5125 47th Avenue S
Seattle, Washington 98118
(206) 612-5511 www.planone.biz

DRAWN BY WMG

DATE APRIL 25, 2022

PLAN NO.

SHEET NO. 11

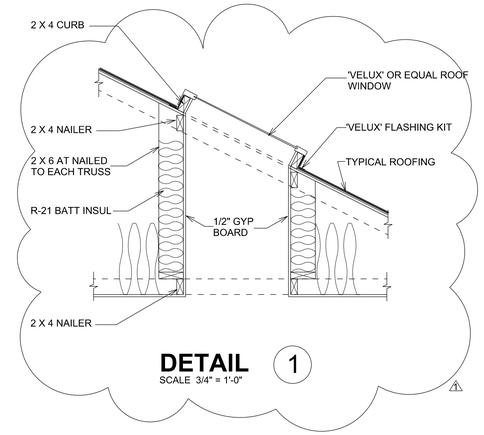

DETAIL 1
SCALE 3/4" = 1'-0"

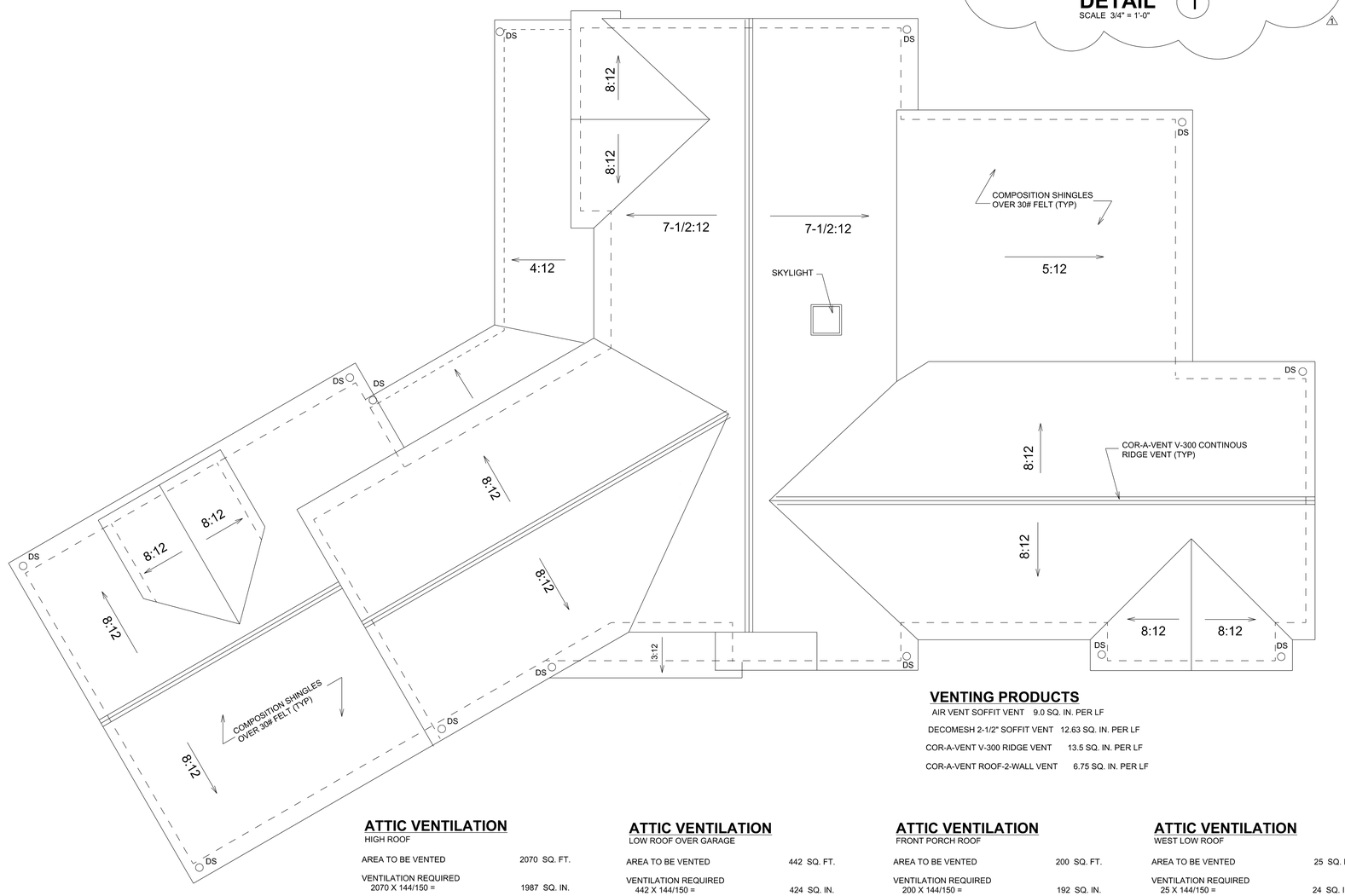

ROOF PLAN
SCALE 1/4" = 1'-0"

VENTING PRODUCTS

AIR VENT SOFFIT VENT	9.0 SQ. IN. PER LF
DECOMESH 2-1/2" SOFFIT VENT	12.63 SQ. IN. PER LF
COR-A-VENT V-300 RIDGE VENT	13.5 SQ. IN. PER LF
COR-A-VENT ROOF-2-WALL VENT	6.75 SQ. IN. PER LF

ATTIC VENTILATION
HIGH ROOF

AREA TO BE VENTED	2070 SQ. FT.
VENTILATION REQUIRED 2070 X 144/150 =	1987 SQ. IN.
VENTILATION PROVIDED (102) LF CONTINOUS SOFFIT VENT AT 12.63 SQ. IN. PER FT	1288 SQ. IN.
80 LF CONTINOUS RIDGE VENT AT 13.5 SQ. IN. PER L/F	1377 SQ. IN.
TOTAL VENTILATION PROVIDED	2665 SQ. IN.

ATTIC VENTILATION
LOW ROOF OVER GARAGE

AREA TO BE VENTED	442 SQ. FT.
VENTILATION REQUIRED 442 X 144/150 =	424 SQ. IN.
VENTILATION PROVIDED (46) LF CONTINOUS SOFFIT VENT AT 9 SQ. IN. PER LF	414 SQ. IN.
(18) LF CONTINOUS RIDGE VENT AT 13.5 SQ. IN. PER LF	243 SQ. IN.
(7) LF CONTINOUS ROOF-TO-WALL VENT AT 6.75 SQ. IN. PER LF	47 SQ. IN.
TOTAL VENTILATION PROVIDED	704 SQ. IN.

ATTIC VENTILATION
FRONT PORCH ROOF

AREA TO BE VENTED	200 SQ. FT.
VENTILATION REQUIRED 200 X 144/150 =	192 SQ. IN.
VENTILATION PROVIDED (36) LF CONTINOUS SOFFIT VENT AT 9 SQ. IN. PER LF	324 SQ. IN.
(36) LF CONTINOUS ROOF TO WALL VENT AT 6.75 SQ. IN. PER LF	243 SQ. IN
TOTAL VENTILATION PROVIDED	567 SQ. IN.

ATTIC VENTILATION
WEST LOW ROOF

AREA TO BE VENTED	25 SQ. FT.
VENTILATION REQUIRED 25 X 144/150 =	24 SQ. IN.
VENTILATION PROVIDED (12) LF CONTINOUS SOFFIT VENT AT 9 SQ. IN. PER LF	108 SQ. IN.
(6) LF CONTINOUS ROOF TO WALL VENT AT 6.75 SQ. IN. PER LF	41 SQ. IN
TOTAL VENTILATION PROVIDED	149 SQ. IN.

REVISIONS		
DATE	BY	REVISION 1
12/08/2022		

PROPOSED NEW RESIDENCE FOR:
EDWARD & CATHERINE MORAN
WEST MERCER WAY MERCER ISLAND, WA 98040

PLAN ONE
FINE HOME DESIGN
5125 47th Avenue S
Seattle, Washington 98118
(206) 612-8511 www.planone.biz

DRAWN BY: WMG
DATE: APRIL 25, 2022
PLAN NO.
SHEET NO. 12

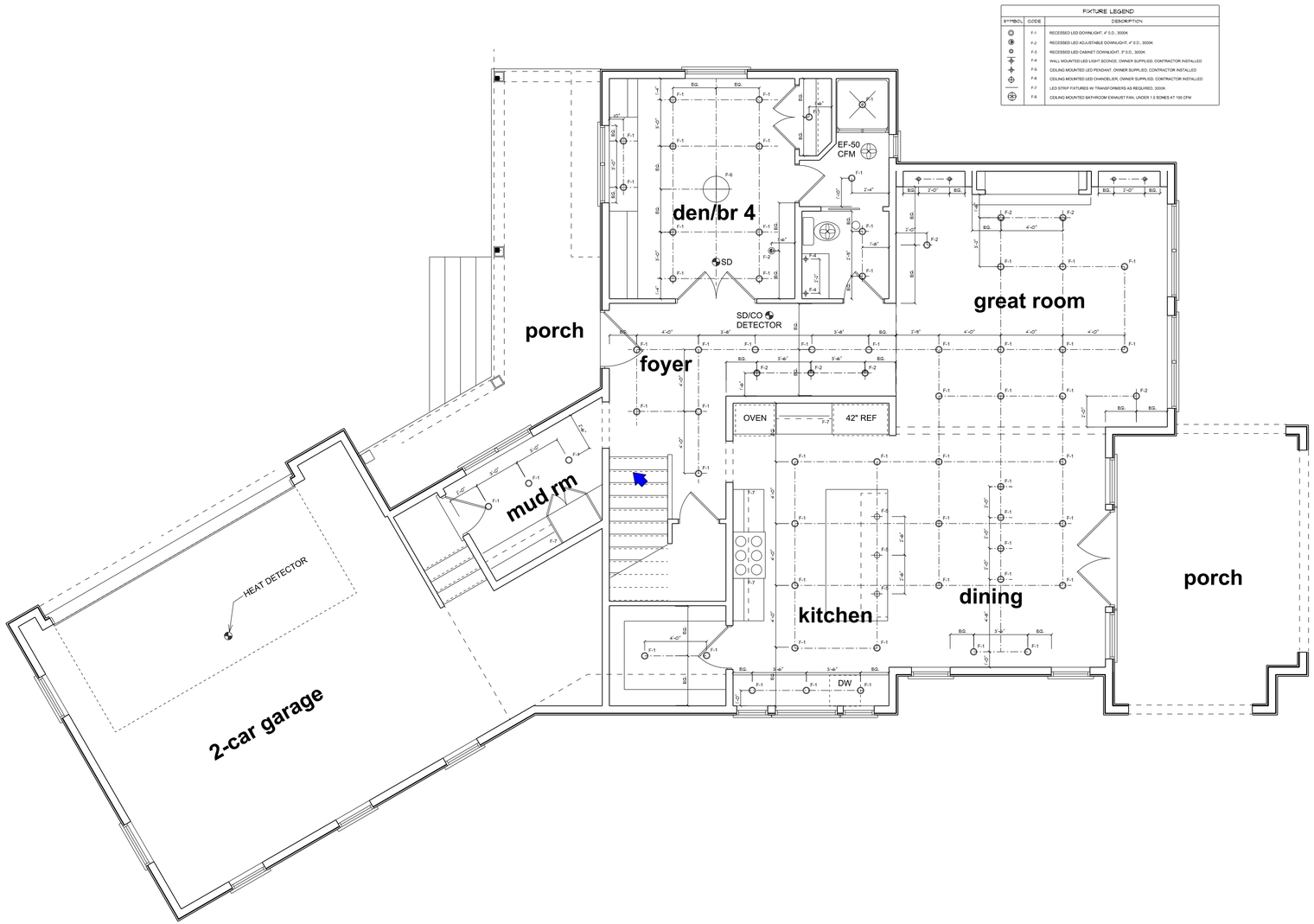

FIXTURE LEGEND		
SYMBOL	CODE	DESCRIPTION
	F-1	RECESSED LED DOWNLIGHT, 4" O.D., 3000K
	F-2	RECESSED LED ADJUSTABLE DOWNLIGHT, 4" O.D., 3000K
	F-3	RECESSED LED CABINET DOWNLIGHT, 3" O.D., 3000K
	F-4	WALL MOUNTED LED LIGHT SCONCE, OWNER SUPPLIED, CONTRACTOR INSTALLED
	F-5	CEILING MOUNTED LED PENDANT, OWNER SUPPLIED, CONTRACTOR INSTALLED
	F-6	CEILING MOUNTED LED CHANDELIER, OWNER SUPPLIED, CONTRACTOR INSTALLED
	F-7	LED STRIP FIXTURES W/ TRANSFORMERS AS REQUIRED, 3000K
	F-8	CEILING MOUNTED BATHROOM EXHAUST FAN, UNDER 1.5 SONES AT 100 CFM

MAIN LEVEL REFLECTED CEILING PLAN

SCALE 1/4" = 1'-0"

DATE	BY	REVISIONS

PROPOSED SINGLE FAMILY RESIDENCE FOR:

EDWARD & CATHERINE MORAN

4882 FOREST AVENUE SE MERCER, ISLAND, WA

PLAN ONE
FINE HOME DESIGN
5125 47th Avenue S
Seattle, Washington 98118
(206) 612-8511 www.planone.biz

DRAWN BY: WMG

DATE: APRIL 25, 2022

PLAN NO.

SHEET NO. **13**

FIXTURE LEGEND		
SYMBOL	CODE	DESCRIPTION
	F-1	RECESSED LED DOWNLIGHT, 4" O.D., 3000K
	F-2	RECESSED LED ADJUSTABLE DOWNLIGHT, 4" O.D., 3000K
	F-3	RECESSED LED CABINET DOWNLIGHT, 2 1/2" O.D., 3000K
	F-4	WALL MOUNTED LED LIGHT SCONCE, OWNER SUPPLIED; CONTRACTOR INSTALLED
	F-5	CEILING MOUNTED LED PENDANT, OWNER SUPPLIED; CONTRACTOR INSTALLED
	F-6	CEILING MOUNTED LED CHANDELIER, OWNER SUPPLIED; CONTRACTOR INSTALLED
	F-7	LED STRIP FIXTURES W/ TRANSFORMERS AS REQUIRED, 3000K
	F-8	CEILING MOUNTED BATHROOM EXHAUST FAN, UNDER 1.5 SONES AT 100 CFM

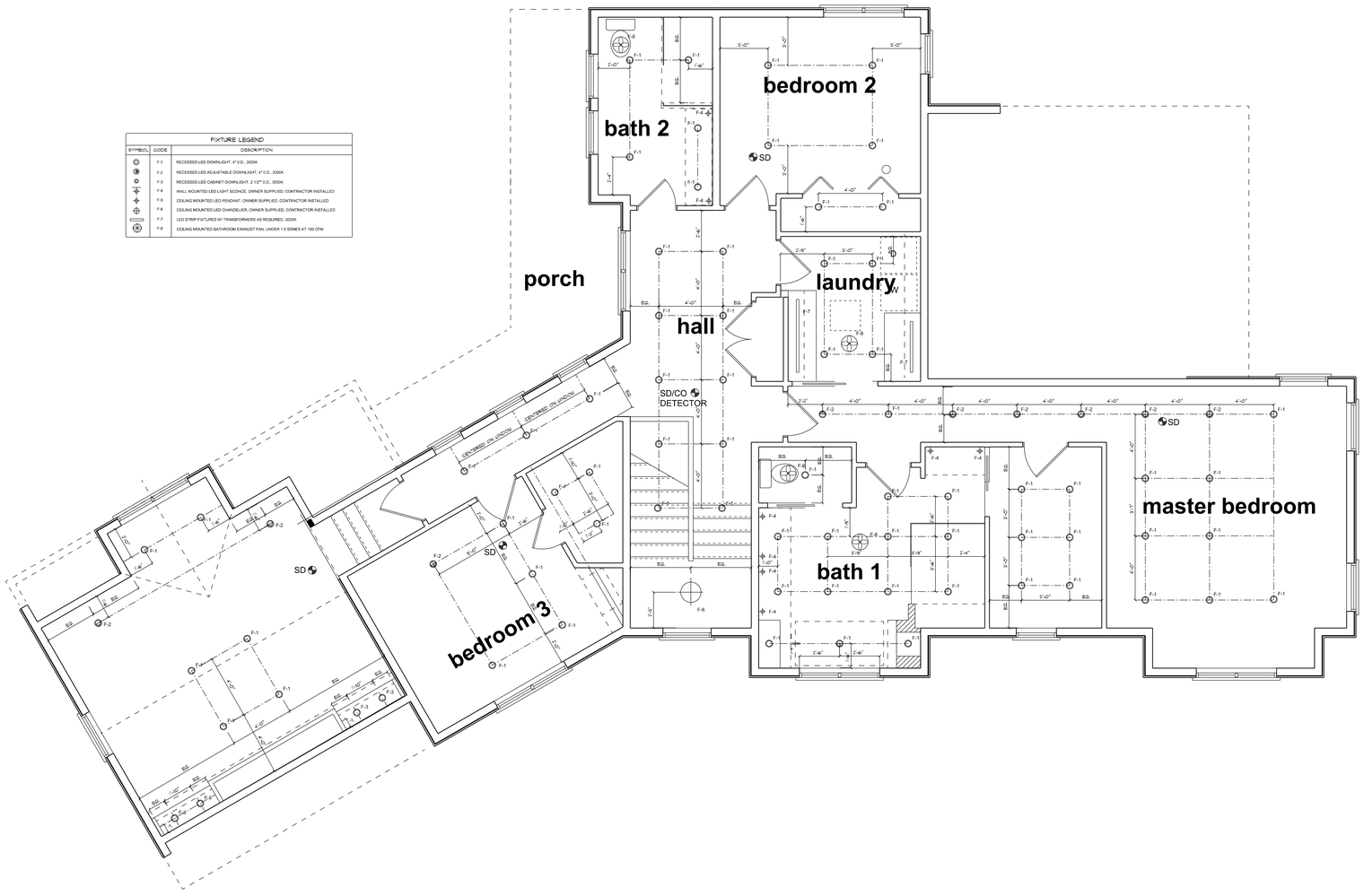

UPPER LEVEL REFLECTED CEILING PLAN

SCALE 1/4" = 1'-0"

NORTH

DATE	BY	REVISIONS

PROPOSED SINGLE FAMILY RESIDENCE FOR:

EDWARD & CATHERINE MORAN

4882 FOREST AVENUE SE MERCER, ISLAND, WA

PLAN ONE
FINE HOME DESIGN
5125 47th Avenue S
Seattle, Washington 98118
(206) 612-8511 www.planone.biz

DRAWN BY WMG

DATE APRIL 25, 2022

PLAN NO.

SHEET NO. 14

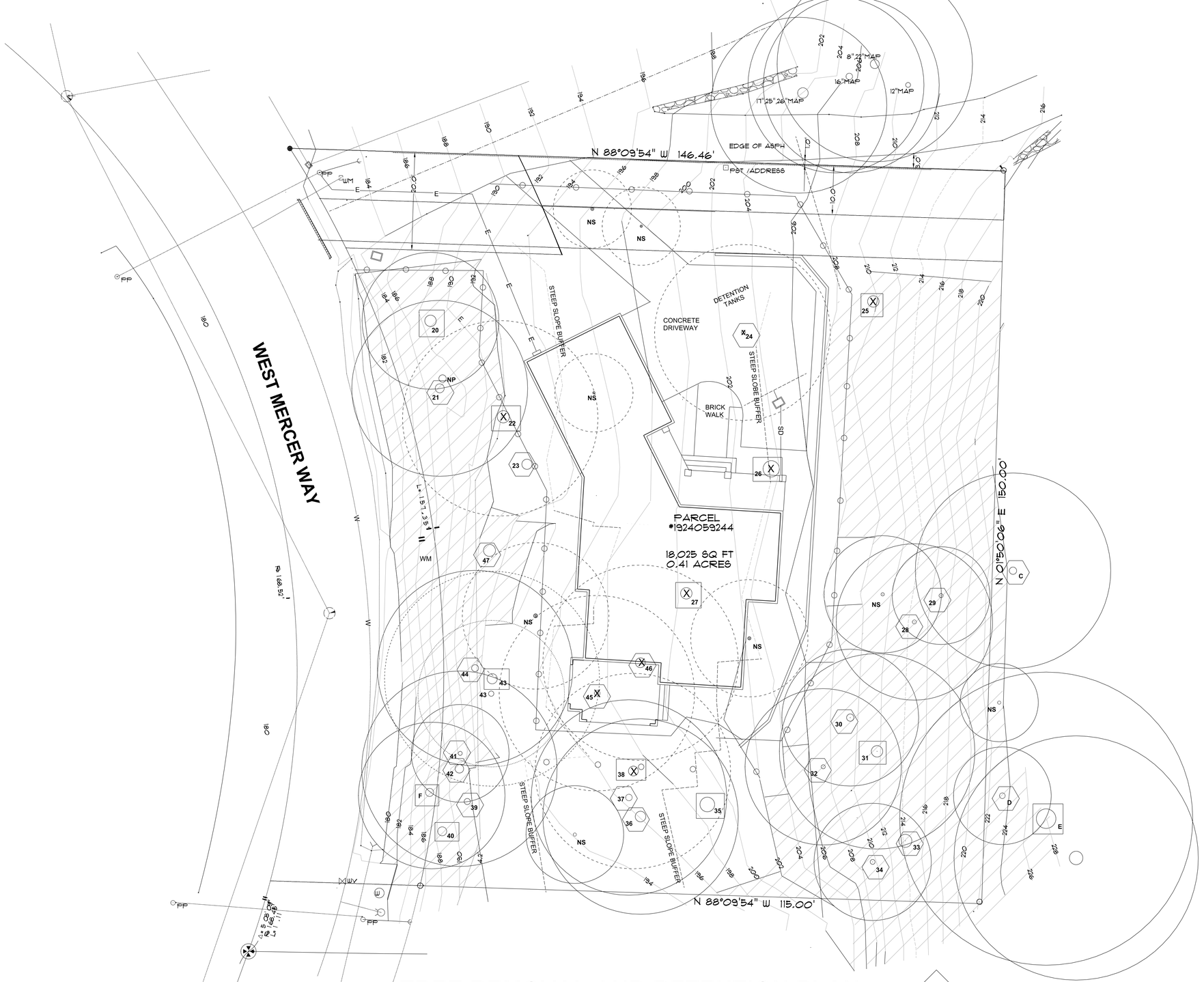

TREE REMOVAL AND RETENTION PLAN

SCALE 1" = 10'-0"

- ASPHALT SURFACE
- BUILDING
- CENTERLINE ROW
- CULVERT PIPE
- DITCH (FLOWLINE)
- FIRE HYDRANT
- GUY ANCHOR
- CATCH BASIN (TYPE 1)
- MONUMENT IN CASE (FOUND)
- POST
- POWER (OVERHEAD)
- POWER POLE
- IRON PIPE (FOUND)
- REBAR & CAP (SET)
- ROCKERY
- SEWER LINE
- SEWER MANHOLE
- STORM DRAIN LINE
- SIZE TYPE TREE (AS NOTED)
- WATER MH
- WATER LINE
- WATER METER
- WATER VALVE
- STEEP SLOPE AREA

CROSS-HATCHED AREAS DESIGNATE STEEP SLOPE AREAS

- LIMITS OF CLEARING,GRADING AND EXCAVATION
- DRIP LINES OF TREES TO BE REMOVED
- LINE OF STEEP SLOPE BUFFERS
- WATER SERVICE
- STORMWATER DRAIN SYSTEM
- SANITARY SEWER
- UNDERGROUND ELECTRICAL SERVICE
- WATER METER
- EXCEPTIONAL TREES WITH DIAMETER OF 24" OR MORE
- EXCEPTIONAL TREES WITH DIAMETER OF LESS THAN 24"

DATE	BY	REVISIONS

EDWARD & CATHERINE MORAN
WEST MERCER WAY MERCER ISLAND, WA 98040

PLAN ONE
FINE HOME DESIGN
5125 47th Avenue S
Seattle, Washington 98118
(206) 612-8511 www.planone.biz

DRAWN BY: WMG

DATE: APRIL 25, 2022

PLAN NO.

SHEET NO. **15**

TREE & VEGETATION PROTECTION

TREE PROTECTION FENCING AND SIGN

1. 6' H CHAIN LINK, WIRE MESH, OR SIMILAR OPEN RIGID MATERIAL (NO PLYWOOD)
2. MUST BE INSTALLED PRIOR TO DEMOLITION OR GROUND DISTURBANCE
3. KEPT IN PLACE FOR THE DURATION OF CONSTRUCTION
4. NO SOIL DISTURBANCE OR ACTIVITY ALLOWED WITHIN FENCED AREA: MATERIAL STORAGE/STOCKPILING, PARKING, EXCAVATION, DUMPING, OR WASHING
5. MODIFICATIONS OF THESE REQUIREMENTS BY APPROVAL OF SDCI PLANNER ONLY
6. IF ROOTS GREATER THAN 2 INCH FOUND OUTSIDE OF FENCING, PROTECT BY HAND EXCAVATION AND, IF NECESSARY, CUT CLEANLY AND KEEP MOIST
7. USE 3 INCHES OR DEEPER WOOD CHIP MULCH WITHING TREE PROTECTION ZONES AS WELL FOR ALL TREES IMPACTED WITHIN THEIR LIMITS OF DISTURBANCE

VEGETATION PROTECTION

1. ORANGE MESH OR SIMILAR OPEN MATERIAL
2. MINIMIZE CONSTRUCTION ZONE
3. PROTECT VEGETATION OUTSIDE CONSTRUCTION ZONE WITH FENCING AS SHOWN
4. USE 3 INCHES OR DEEPER WOOD CHIP MULCH OUTSIDE FENCED AREAS TO PROTECT FEEDER ROOTS

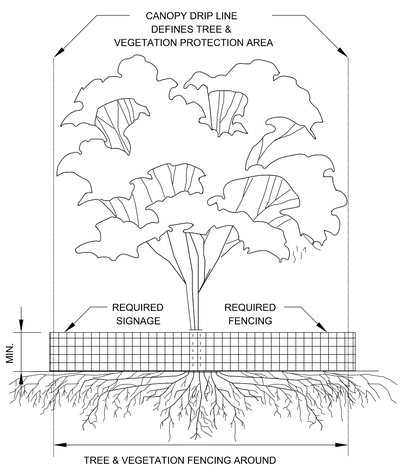

TREE & VEGETATION FENCING AROUND
ENTIRE DRIP LINE ON PERMIT SITE.
ALTERNATIVE TREE PROTECTION, IF APPROVED
BY SDCI, AS SHOWN ON SITE PLAN

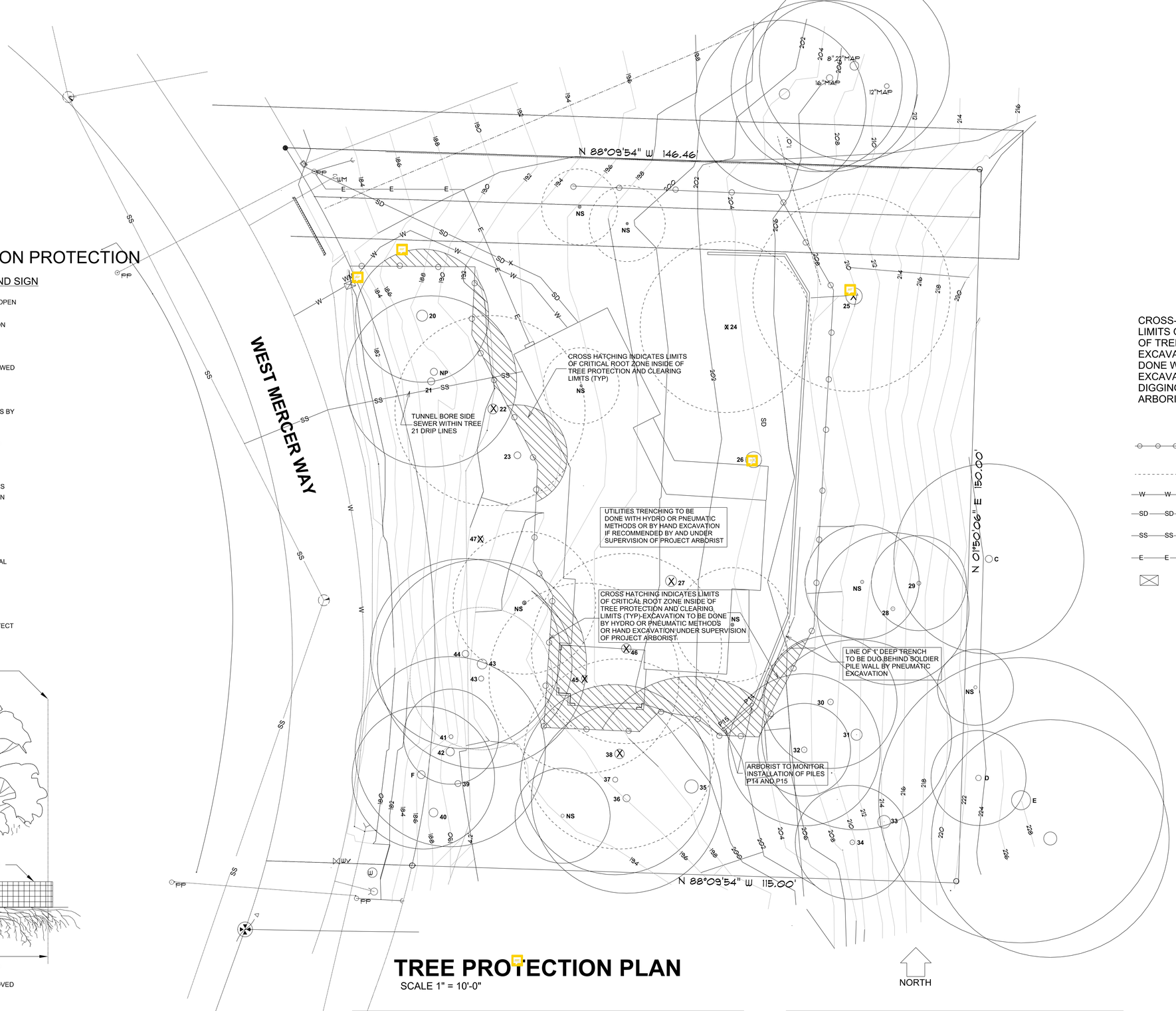

TREE PROTECTION PLAN

SCALE 1" = 10'-0"

CROSS-HATCHED AREASINDICATE LIMITS OF CRITICALROOT ZONE OUTSIDE OF TREEPROTECTION FENCING- ALL EXCAVATION IN THOSE AREAS TO BE DONE WITH HYDRO OR PNUEMATIC EXCAVATION METHODS OR BY HAND DIGGING UNDER SUPERVISION OF THE ARBORIST.

- TREE PROTECTION FENCING AND LIMITS OF CLEARING, GRADING AND EXCAVATION
- DRIP LINES OF TREES TO BE REMOVED
- W — W — WATER SERVICE
- SD — SD — STORMWATER DRAIN SYSTEM
- SS — SS — SANITARY SEWER
- E — E — UNDERGROUND ELECTRICAL SERVICE
- WATER METER

PNEUMATIC AIR OR HYDRO EXCAVATION TO BE UTILIZED AT FOUNDATION LOCATIONS IN CONFLICT WITH CRITICAL ROOT ZONES AND UNDER THE SUPERVISION OF PROJECT ARBORIST.

ALL GRADING AND EXCAVATION WORK WITHIN THE LIMITS OF DISTURBANCE SHALL BE MONITORED BY PROJECT ARBORIST

REVISIONS		
DATE	BY	
12/08/2022		REVISED

EDWARD & CATHERINE MORAN
WEST MERCER WAY MERCER ISLAND, WA 98040

PLAN ONE
FINE HOME DESIGN
5125 47th Avenue S
Seattle, Washington 98118
(206) 612-8511 www.planone.biz

DRAWN BY: WMG
DATE: APRIL 25, 2022
PLAN NO.
SHEET NO. **16**

STRUCTURAL NOTES

1. CODE: IRC, 2018 EDITION.

2. LOADS:

   ROOFL.L.25 PSF (SNOW)

   SEISMIC: SITE CLASS = D
   S_S = 1.274g
   S = 0.425g
   S_{DS} = 0.849g
   S_{D1} = 0.445g
   R = 6.5 (WOOD SHEAR WALL)

   WIND: 110 M.P.H. (EXPOSURE "B"): I_w=1.0

   SOIL BEARING: 1500 PSF (ASSUMED). BOTTOM OF ALL FOUNDATION SHALL BE MINIMUM OF 18" BELOW GRADE.

3. CONCRETE:

   F'c = 2,500 PSI

   MIXING AND PLACING OF ALL CONCRETE AND SELECTION OF MATERIALS SHALL BE IN ACCORDANCE WITH THE ACI CODE 318. PROPORTIONING OF AGGREGATE TO CEMENT SHALL BE SUCH AS TO PRODUCE A DENSE WORKABLE MIX WITH 4" MAXIMUM SLUMP, WHICH CAN BE PLACED WITHOUT SEGREGATION OR EXCESS FREE SURFACE WATER. 3/4" CHAMFER ALL EXPOSED EDGES, UNLESS INDICATED OTHERWISE ON ARCHITECTURAL DRAWINGS. AIR ENTRAIN ALL CONCRETE EXPOSED TO WEATHER WITH 3% TO 6% AIR BY VOLUME.

4. REINFORCING:DEFORMED BARS GRADE 40 (fy=40,000 PSI) UNLESS OTHERWISE NOTED ON THE DRAWINGS. LAP ALL CONTINUOUS REINFORCING BARS 48 BAR DIAMETERS (2'-0" MINIMUM, UNLESS NOTED OTHERWISE. PROVIDE CORNER BARS (2'-0" BEND) FOR ALL HORIZONTAL REINFORCEMENT. DETAIL REINFORCING BARS IN ACCORDANCE WITH THE "ACI DETAILING MANUAL".

   CONCRETE COVER TO MAIN REINFORCEMENT SHALL BE:
   FORMED SURFACES -
   WEATHER FACE = 1 1/2"
   EARTH FACE = 2"
   INTERIOR FACE = 3/4"
   FOOTINGS CAST AGAINST EARTH = 3"

5. METALS: ALL MISCELLANEOUS STEEL SHALL CONFORM TO ASTM A-36 (fy=36,000 PSI) UNLESS NOTED OTHERWISE. MACHINE BOLTS TO BE A-307. ANCHOR BOLTS INTO CONCRETE SHALL BE PLACED ACCURATELY ACCORDING TO SIZE AND LOCATIONS SHOWN AND PROVIDED FOR BY OTHERS. ALL EXPANSION ANCHORS SHALL BE HILTI KWIK BOLT TZ OR APPROVED EQUAL. FOLLOW MANUFACTURERS RECOMMENDATIONS FOR INSTALLATION.

6. CARPENTRY:
   ALL NAILS TO BE COMMON NAILS. LUMBER GRADES:
   4X BEAMS D.F. #1
   6X BEAMS D.F. #1
   BLOCKING D.F. #2
   2X STUDS = D.F. #2
   LEDGERS D.F. #2

   ALL LUMBER NOT NOTED ABOVE TO BE D.F. #2 OR BETTER. ALL LUMBER SHALL CONFORM TO "WWPA GRADING RULES FOR WESTERN LUMBER-LATEST EDITION" AND EACH PIECE SHALL BEAR A VALID GRADE STAMP THAT IS NOT TO BE REMOVED FROM THE STRUCTURAL MEMBER. BOLT HEADS AND NUTS BEARINGS AGAINST WOOD SHALL BE PROVIDED WITH STANDARD CUT WASHERS. ALL WOOD IN CONTACT WITH CONCRETE OR MASONRY SHALL BE PRESSURE TREATED.

7. PLYWOOD:
   ROOF SHEATHING = 1/2" CDX PLYWOOD WITH EXTERIOR GLUE, INDEX 32/16 OR 24/0.
   FLOOR SHEATHING = 3/4" T.&G. PLYWOOD, INDEX 48/24.
   ALL SHEATHING SHALL CONFORM TO U.S. PRODUCT STANDARD. NAILING SHALL BE AS INDICATED ON PLAN.

8. GLU-LAMINATED BEAMS:
   GLU-LAMINATED WOOD BEAMS, SHALL BE KILN DRIED, INDUSTRIAL APPEARANCE, STRESS GRADE COMBINATION 24F-V4 (fb=2400 PSI, fv=165 PSI) AT SIMPLE SPAN BEAM AND STRESS GRADE COMBINATION 24F-V8 (fb=2400 psi, fv=165 psi) AT CANTILEVERED BEAMS. PROVIDE TOP TENSION LAMS AT CANTILEVERS.

9. TRUSSES:
   TRUSSES ARE AS NOTED ON THE PLANS AND FABRICATED IN ACCORDANCE WITH 2018 IRC. EACH TRUSS SHALL BEAR THE QUALITY CONTROL STAMP, MANUFACTURER PLANTS NAME/ADDRESS, DESIGN LOAD AND MAXIMUM SPACING. TRUSS FABRICATOR TO PROVIDE ALL REQUIRED BRIDGING BLOCKING, BOTH PERMANENT AND ERECTION. DESIGN CRITERIA SHALL MEET OR EXCEED THE FOLLOWING:

   ROOF TRUSS LOADING:
   LIVE LOAD = 25 PSF (SNOW)
   DEAD LOAD = 15 PSF
   TOTAL LOAD DEFLECTION = L/240
   LIVE LOAD DEFLECTION = L/360 FLOOR TRUSS LOADING:
   LIVE LOAD = 40 PSF
   DEAD LOAD = 15 PSF TOTAL LOAD DEFLECTION = L/240
   LIVE LOAD DEFLECTION = L/480

10. SHOP DRAWINGS:SUBMIT 3-SETS OF SHOP DRAWINGS TO ENGINEER FOR REVIEW FOR DESIGN INTENT ONLY PRIOR TO FABRICATION AND AFTER CONTRACTOR REVIEW FOR ROOF AND FLOOR TRUSSES. ALL DIMENSIONS AND QUANTITIES MUST BE VERIFIED AND APPROVED BY THE CONTRACTOR AND IS NOT RESPONSIBILITY OF THE ENGINEER OF RECORD.

11. SPECIAL INSPECTION: PROVIDE SPECIAL INSPECTION PER 2015 IBC. ALL INSPECTION REPORTS SHALL BE SUBMITTED TO THE BUILDING DEPARTMENT, ARCHITECT, ENGINEER AND OWNER FOR REVIEW.

    FOLLOWING STRUCTURAL OBSERVATIONS ARE REQUIRED FOR:
    A. SHEAR WALL AND DIAPHRAGM NAILING, STRAPS AND HOLDOWNS; AND
    B. EXPANSION AND EPOXY GROUT ANCHORS.

12. SPECIAL CONDITIONS:DURING CONSTRUCTION THE CONTRACTOR SHALL COORDINATE ALL TRADES AND VERIFY DIMENSIONS IN FIELD. OBTAIN ARCHITECT'S APPROVAL PRIOR TO ALL FIELD CHANGES. SEE ARCHITECTURAL DRAWINGS FOR ALL FLOOR OPENING DIMENSIONS AND LOCATIONS, FLOOR FINISHES, ETC. CONTRACTOR SHALL PROVIDE PERMANENT AND TEMPORARY SHORING AS REQUIRED.

NAILING SCHEDULE TABLE 2304.9.1

(UNLESS NOTED OTHERWISE ON DRAWINGS)

	CONNECTION	NAILS	
1	JOIST TO SILL OR GIRDER: TOENAIL	3 - 8d COMMON (2-1/2" X 0.131"),	3 - 3" X 0.131" NAILS
2	BRIDGING TO JOIST: TOENAIL EACH END	2 - 8d COMMON (2-1/2" X 0.131"),	2 - 3" X 0.131" NAILS
3	1" X 6" (25mm X 152mm) SUBFLOOR OR LESS TO EACH JOIST: FACE NAIL		2 - 8d COMMON (2-1/2" X 0.131")
4	WIDER THAN 1" X 6" (25mm X 152mm) SUBFLOOR TO EACH JOIST: FACE NAIL		3 - 8d COMMON (2-1/2" X 0.131")
5	2" (51mm) SUBFLOOR TO JOIST OR GIRDER: BLIND AND FACE NAIL		2 - 16d COMMON (3-1/2" X 0.162")
6	SOLE PLATE TO JOIST OR BLOCKING: TYPICAL FACE NAIL	16d (3-1/2" X 0.131") AT 16" O.C.,	3" X 0.131" NAILS AT 8" O.C.
	SOLE PLATE TO JOIST OR BLOCKING: AT BRACED WALL PANELS	3 - 16d (3-1/2" X 0.131") AT 16" O.C.,	4 - 3" X 0.131" NAILS AT 16" O.C.
7	TOP PLATE TO STUD: END NAIL	2 - 16d COMMON (3-1/2" X 0.162"),	3 - 3" X 0.131" NAILS
8	STUD TO SOLE PLATE: TOENAIL	4 - 8d COMMON (2-1/2" X 0.131"),	3 - 3" X 0.131" NAILS
	STUD TO SOLE PLATE: END NAIL	2 - 20d COMMON (3-1/2" X 0.162"),	3 - 3" X 0.131" NAILS
9	DOUBLE STUDS: FACE NAIL	16d (3-1/2" X 0.131") AT 16" O.C.,	3" X 0.131" NAILS AT 8" O.C.
10	DOUBLE TOP PLATES: TYPICAL FACE NAIL	16d (3-1/2" X 0.135") AT 16" O.C.,	3" X 0.131" NAILS AT 12" O.C.
	DOUBLE TOP PLATES: LAP SPLICE	8 - 16d COMMON (3-1/2" X 0.135"),	12 - 3" X 0.131" NAILS
11	BLOCKING BETWEEN JOISTS OR RAFTERS TO TOP PLATE: TOENAIL	3 - 8d COMMON (2-1/2" X 0.131"),	3 - 3" X 0.131" NAILS
12	RIM JOIST TO TOP PLATE: TOENAIL	8d (2-1/2" X 0.131") AT 6" O.C.,	3" X 0.131" NAILS AT 6" O.C.
13	TOP PLATES, LAPS AND INTERSECTIONS: FACE NAIL	2 - 16d COMMON (3-1/2" X 0.162"),	3 - 3" X 0.131" NAILS
14	CONTINUOUS HEADER, TWO PIECES	16d COMMON (3-1/2" X 0.162") AT 16" O.C. ALONG EDGE	
15	CEILING JOISTS TO PLATE: TOENAIL	3 - 8d COMMON (2-1/2" X 0.131),	5 - 3" X 0.131 NAILS
16	CONTINUOUS HEADER TO STUD: TOENAIL	4 - 8d COMMON (2-1/2" X 0.131")	
17	CEILING JOISTS, LAPS OVER PARTITIONS: FACE NAIL	3 - 16d (3-1/2" X 0.162") MIN., TABLE 2308.10.4.1	
	(SEE SECTION 2308.10.4.1, TABLE 2308.10.4.1)	4 - 3" X 0.131" NAILS, 4 - 3" 14 GAGE STAPLES	
18	CEILING JOISTS TO PARALLEL RAFTER: FACE NAIL	3 - 16d (3-1/2" X 0.162") MIN., TABLE 2308.10.4.1	
	(SEE SECTION 2308.10.4.1, TABLE 2308.10.4.1)	4 - 3" X 0.131" NAILS	
19	RAFTER TO PLATE: TOENAIL	3 - 8d COMMON (2-1/2" X 0.131"),	3 - 3" X 0.131" NAILS
	(SEE SECTION 2308.10.4.1, TABLE 2308.10.4.1)		
20	1" BRACE TO EACH STUD AND PLATE: FACE NAIL	2 - 8d COMMON (2-1/2" X 0.131"),	2 - 3" X 0.131" NAILS
21	1" X 8" SHEATHING OR LESS TO EACH BEARING: FACE NAIL	2 - 8d COMMON (2-1/2" X 0.131")	
22	WIDER THAN 1" X 8" SHEATHING TO EACH BEARING: FACE NAIL	3 - 8d COMMON (2-1/2" X 0.131")	
23	BUILT-UP CORNER STUDS	16d (3-1/2" X 0.162") AT 24" O.C.,	3" X 0.131" NAILS AT 16" O.C.
24	BUILT-UP GIRDER AND BEAMS	20d COMMON (4" X 0.192") AT 32" O.C.,	3" X 0.131" NAILS AT 24" O.C.
0		2 - 20d COMMON (4" X 0.192"),	3 - 3" X 0.131" NAILS
0		FACE NAIL AT ENDS AND AT EACH END	
25	2" PLANKS	2 -16d COMMON (3-1/2" X 0.162") AT EACH BEARING	
26	COLLAR TIE TO RAFTER: FACE NAIL	3 - 10d COMMON (3" X 0.148"),	4 - 3" X 0.131" NAILS
27	JACK RAFTER TO HIP: TOENAIL	3 - 10d COMMON (3" X 0.148"),	4 - 3" X 0.131" NAILS
	JACK RAFTER TO HIP: FACE NAIL	2 - 16d COMMON (3-1/2" X 0.162"),	3 - 3" X 0.131" NAILS
28	ROOF RAFTER TO 2-BY RIDGE BEAM: TOENAIL	3 - 16d COMMON (3" X 0.162"),	3 - 3" X 0.131" NAILS
	ROOF RAFTER TO 2-BY RIDGE BEAM: FACE NAIL	2 - 16d COMMON (3-1/2" X 0.162"),	3 - 3" X 0.131" NAILS
29	JOIST TO BAND JOIST: FACE NAIL	3 - 16d COMMON (3-1/2" X 0.162"),	4 - 3" X 0.131" NAILS
30	LEDGER STRIP: FACE NAIL	3 - 16d COMMON (3-1/2" X 0.162"),	4 - 3" X 0.131" NAILS
a.	COMMON OR BOX NAILS MAY BE USED EXCEPT WHERE OTHERWISE STATED.		
b.	NIALS SPACED AT 6 INCHES ON CENTER AT EDGES, 12 INCHES AT INTERMEDIATE SUPPORTS EXCEPT 6 INCHES AS SUPPORTS WHERE SPANS ARE 48 INCHES OR MORE. FOR NAILING OF WOOD STRUCTURAL PANEL AND PARTICLEBOARD DIAPHRAGMS AND SHEARWALLS, REFER TO SECTION 2305. NAILS FOR WALL SHEATHING ARE PERMITTED TO BE COMMON, BOX OR CASING.		
c.	COMMON OR DEFORMED SHANK (6d - 2" X 0.113; 8d - 2-1/2" X 0.131; 10d - 3" X 0.148")		
d.	COMMON (6d - 2" X 0.113; 8d - 2-1/2" X 0.131; 10d - 3" X 0.148")		
e.	DEFORMED SHANK (6d - 2" X 0.113; 8d - 2-1/2" X 0.131; 10d - 3" X 0.148")		
f.	CORROSION-RESISTANT SIDING (6d - 1 7/8" X 0.106"; 8d - 2-3/8" X 0.128") OR CASING 9 - 6d - 2" X 0.099"; 8d - 2-1/2" X 0.113" NAILS		
g.	FASTENERS SPACED 3 INCHES ON CENTER AT EXTERIOR EDGES AND 6" ON CENTER AT INTERMEDIATE SUPPORTS, WHEN USED AS STRUCTURAL SHEATHING. SPACING SHALL BE 6 INCHES ON CENTER RON THE EDGES AND 12 INCHES ON CENTER AT INTERMEDIATE SUPPORTS FOR NONSTRUCTURAL APPLICATIONS.		
h.	CORROSION-RESISTANT ROOFING NAILS WITH 7/16 INCH DIAMETER HEAD AND 1-1/2 INCH LENGTH FOR 1/2 INCH SHEATHING AND 1-3/4 INCH LENGTH FOR 25/32 INCH SHEATHING		
i.	CASING (1-1/2" X 0.08") OR FINISH (1-1/2" X 0.072") NAILS SPACED 6 INCHES ON PANEL EDGES, 12 INCHES AT INTERMEDIATE SUPPORTS		
j.	PANEL-SUPPORTS AT 24 INCHES CASING OR FINISH NAILS SPACED 8 INCHES ON PANEL, 12 INCHES AT INTERMEDIATE SUPPORTS.		
k.	FOR ROOF SHEATHING APPLICATIONS, 8d NAILS (2-1/2" X 0.113") ARE MINIMUM REQUIRED FOR WOOD STRUCTURAL PANELS.		
l.	FOR ROOF SHEATHING, FASTENERS SPACED 4 INCHES ON CENTER AT EDGES, 8 INCHES AT INTERMEDIATE SUPPORTS.		
m.	FASTENERS SPACED 4 INCHES ON CENTER AT EDGES, 8 INCHES AT INTERMEDIATE SUPPORTS FOR SUBFLOOR AND WALL SHEATHING AND 3 INCHES ON CENTER AT EDGES, 6 INCHES AT INTERMEDIATE SUPPORTS FOR ROOF SHEATHING		
n.	FASTENERS SPACED 4 INCHES ON CENTER AT EDGES, 8 INCHES AT INTERMEDIATE SUPPORT.		
o.	NAILING INTO P.T. LUMBER SHALL BE WITH HOT DIPPED GALVANIZED OR OTHER APPROVED CORROSION RESISTANT MATERIAL		

REVISION EDITION
1
2
3
4

DRAWN BY:
CHECKED BY: A.G.
DATE: 11-30-2021

PHONE 425-351-5999
P.O. BOX 7255
BELLEVUE, WA 98008

K.I.A. C.O.
CONSULTING STRUCTURAL ENGINEERS

PROPOSED NEW RESIDENCE
EDWARD & CATHERINE MORAN
5000 WEST MERCER WAY
MERCER ISLAND, WA 98040

STRUCTURAL NOTES

SHEET
S-1
OF
-

JOB #

FOUNDATION NOTES

1. VERIFY ALL EXISTING CONDITIONS BEFORE PROCEEDING WITH THE WORK.
2. CONCRETE STRENGTH TO BE 2500 PSI AT 28 DAYS. CONCRETE STRENGTH AT RETAINING WALLS TO BE 3000 PSI AT 28 DAYS.
3. FOOTINGS TO BEAR MIN 18" BELOW FINISH GRADE ON MEDIUM DENSEOR BETTER NATIVE SOILS
4. REINFORCING BARS TO BE ASTM 615 GRADE 40 U.N.O. REINFORCING BARS AT RETAININ WALLS TO BE ASTM 615 GRADE 60.
5. STEP FOUNDATION WALL AS ALLOWED BY GRADE U.N.O.
6. ALL FRAMING AND HOLD-DOWN HARDWARE TO BE "SIMPSON" OR EQUAL. INSTALL PER MANUFACTURER'S SPECIFICATIONS.
7. PROVIDE 3" X 3" X 1/4" PLATE WASHERS AT ALL ANCHOR BOLTS.
8. ANCHOR BOLTS PER SHEAR WALL SCHEDULE.
9. ALL BEARING POSTS ARE TO BE MINIMUM TREATED 4 X 4 AND TREATED 4 X 6 AT BEAM BREAKS U.N.O.
10. ALL WOOD IN CONTACT WITH CONCRETE OR GRADE TO BE PRESSURE TREATED (TRTD)
11. ANY EXISTING ANCHOR BOLTS THAT ARE REMOVED ARE TO BE REPLACED PER EXISTING SIZE AND SPACING OR PER THE SHEAR WALL SCHEDULE. RETROFITTED BOLTS TO BE DRILLED AND EXPOXIED WITH "SET" EPOXY TO A MIN EMBEDMENT OF 7".
12. SOIL BEARING CAPACITY ASSUMED TO BE 1500 PSF PER GEOTECHNICAL REPORT
13. SPECIAL INSPECTION REQUIRED FOR ALL POST SET FOUNDATIONS AND COMPLETED SPECIAL INSPECTION FORM IS TO BE SUBMITTED TO THE BUILDING DEPARTMENT FOLLOWING INSPECTION.
14. FOUNDATION CONSTRUCTION TO BE PER GEOTECHNICAL REPORT DATED SEPTEMBER 27,2021 BY NELSON GEOTECHNICAL ASSOCIATES, INC.

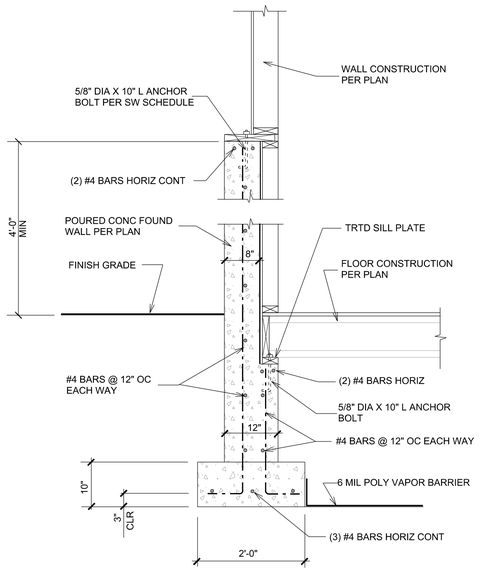

DETAIL 1
SCALE 3/4" = 1'-0"

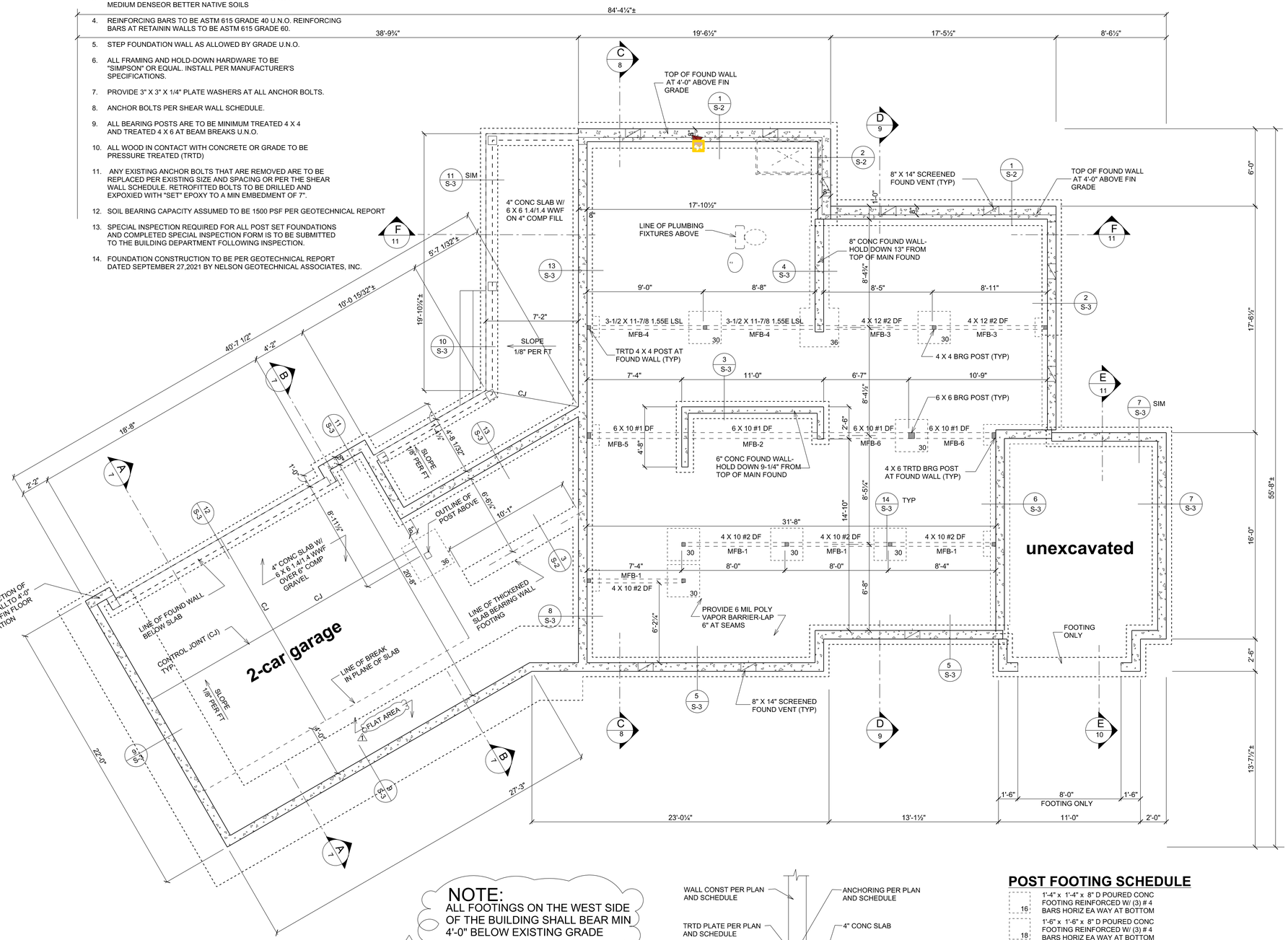

FOUNDATION PLAN
SCALE 1/4" = 1'-0"

NORTH

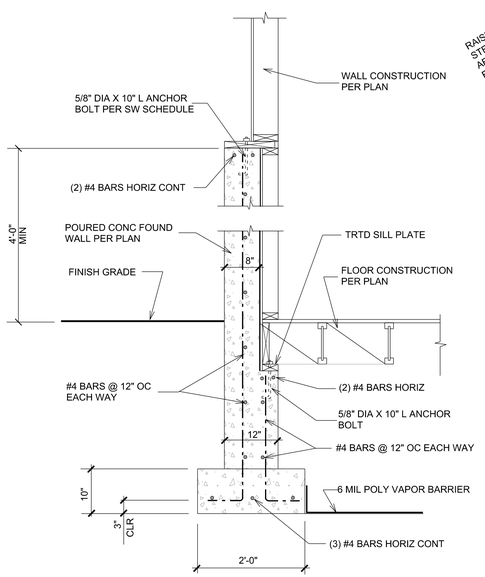

DETAIL 2
SCALE 3/4" = 1'-0"

NOTE:
ALL FOOTINGS ON THE WEST SIDE OF THE BUILDING SHALL BEAR MIN 4'-0" BELOW EXISTING GRADE

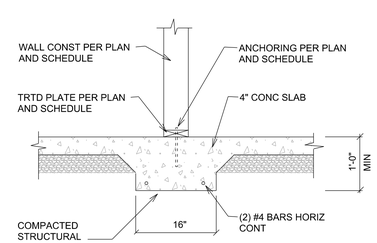

DETAIL 3
SCALE 3/4" = 1'-0"

POST FOOTING SCHEDULE

16	1'-4" x 1'-4" x 8" D POURED CONC FOOTING REINFORCED W/ (3) # 4 BARS HORIZ EA WAY AT BOTTOM
18	1'-6" x 1'-6" x 8" D POURED CONC FOOTING REINFORCED W/ (3) # 4 BARS HORIZ EA WAY AT BOTTOM
24	2'-0" x 2'-0" x 8" D POURED CONC FOOTING REINFORCED W/ (3) # 4 BARS HORIZ EA WAY AT BOTTOM
30	2'-6" x 2'-6" x 10" D POURED CONC FOOTING REINFORCED W/ (4) # 4 BARS HORIZ EA WAY AT BOTTOM
36	3'-0" x 3'-0" x 1'-0" D POURED CONC FOOTING REINFORCED W/ (4) # 4 BARS HORIZ EA WAY AT BOTTOM
48	4'-0" x 4'-0" x 1'-0" D POURED CONC FOOTING REINFORCED W/ (5) # 4 BARS HORIZ EA WAY AT BOTTOM
54	4'-6" x 4'-6" x 1'-0" D POURED CONC FOOTING REINFORCED W/ (6) # 4 BARS HORIZ EA WAY AT BOTTOM

REVISION EDITION

1	1 12/08/2022
2	
3	
4	

DRAWN BY:
CHECKED BY: A.G.
DATE: 11-30-2021

PHONE 425-351-5999
P.O. BOX 1755
BELLEVUE, WA 98008

K I A C O
CONSULTING STRUCTURAL ENGINEERS

PROPOSED NEW RESIDENCE
EDWARD & CATHERINE MORAN
5028 WEST MERCER WAY
MERCER ISLAND, WA 98040

FOUNDATION PLAN

SHEET
S-2
OF
-

JOB #

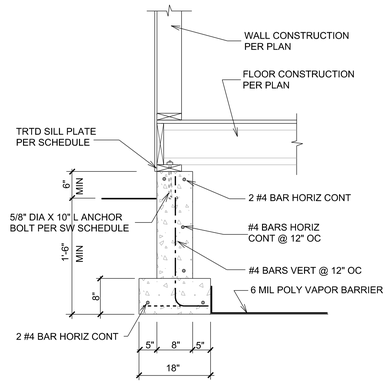

DETAIL 1
SCALE 3/4" = 1'-0"

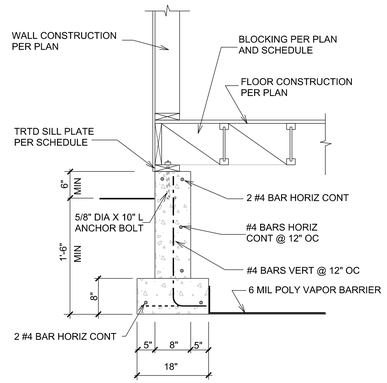

DETAIL 2
SCALE 3/4" = 1'-0"

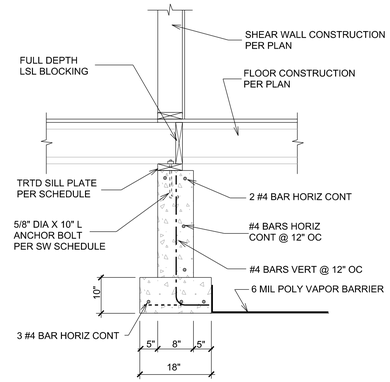

DETAIL 3
SCALE 3/4" = 1'-0"

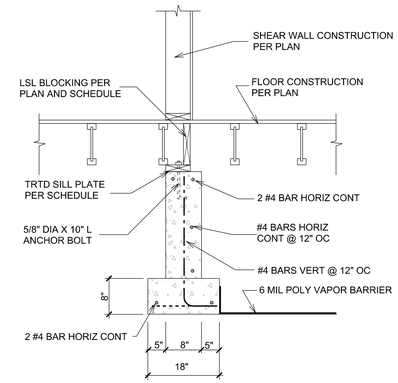

DETAIL 4
SCALE 3/4" = 1'-0"

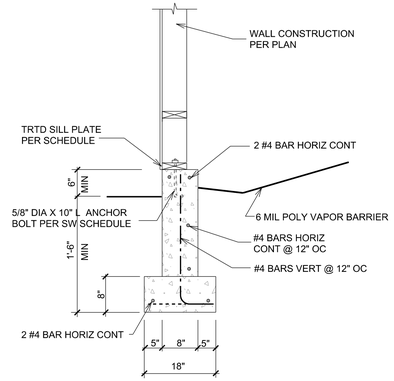

DETAIL 5
SCALE 3/4" = 1'-0"

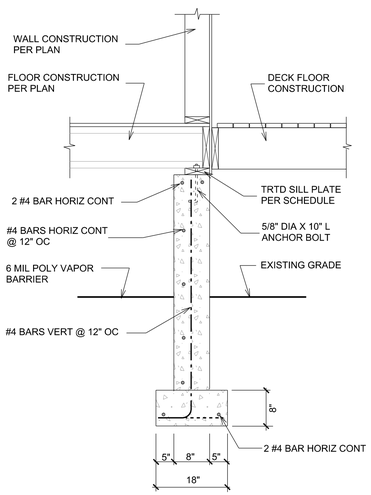

6 **DETAIL**
SCALE 3/4" = 1'-0"

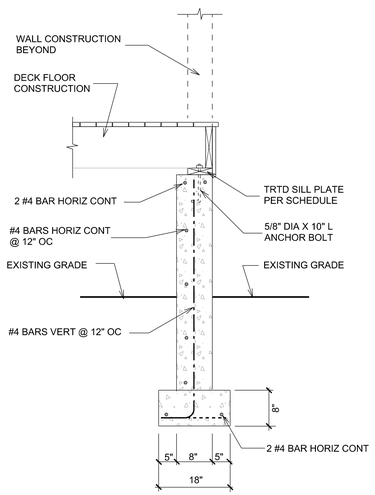

7 **DETAIL**
SCALE 3/4" = 1'-0"

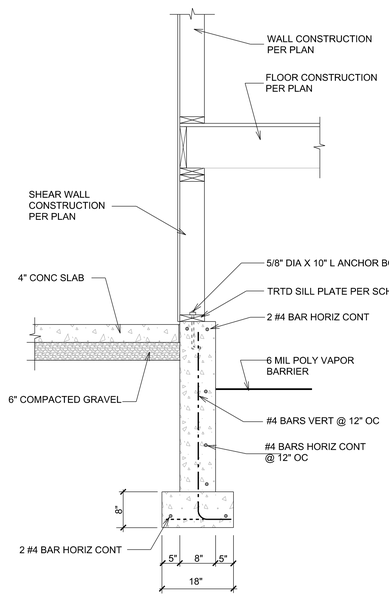

DETAIL 8
SCALE 3/4" = 1'-0"

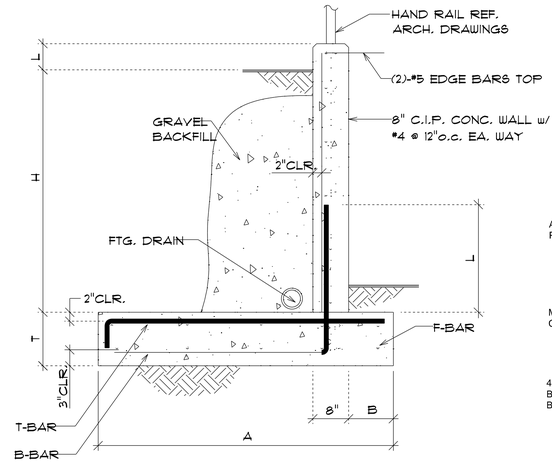

DETAIL 9
SCALE 3/4" = 1'-0"

F'c = 3000 PSI
Fy = 60 KSI #4 BAR
= 60 KSI # 5 BAR

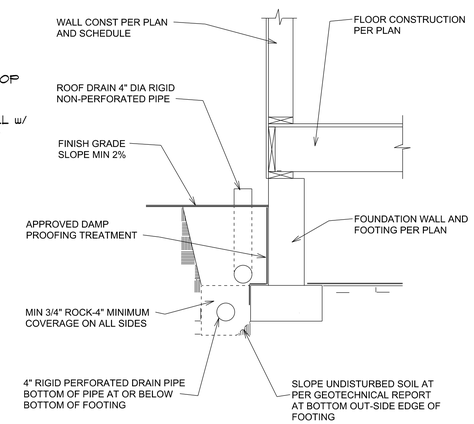

TYPICAL DRAINAGE DETAIL
SCALE 3/4" = 1'-0"

RETAINING WALL SCHEDULE

H	A	B	L	T	B-BAR	T-BAR	F-BAR
2'-0"	2'-0"	6"	2'-0"	12"	#4 @ 12"o.c.	#4 @ 16"o.c.	(3)-#4 T. & B.
4'-0"	3'-0"	6"	2'-0"	12"	#4 @ 12"o.c.	#4 @ 12"o.c.	(4)-#4 T. & B.
6'-0"	4'-6"	9"	3'-0"	12"	#5 @ 12"o.c.	#5 @ 16"o.c.	(5)-#4 T. & B.
8'-0"	6'-0"	12"	4'-0"	15"	#7 @ 12"o.c.	#5 @ 12"o.c.	(6)-#4 T. & B.

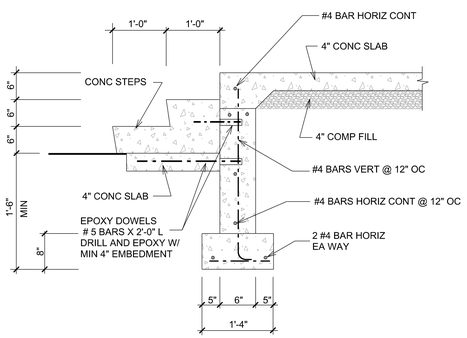

DETAIL 10
SCALE 3/4" = 1'-0"

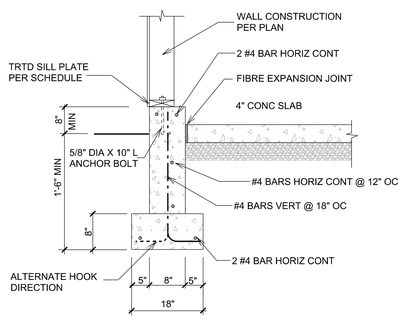

DETAIL 11
SCALE 3/4" = 1'-0"

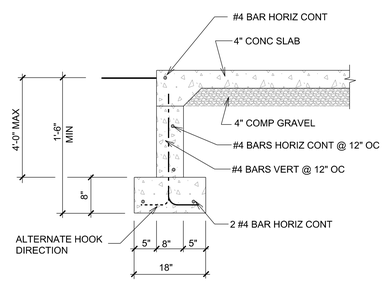

DETAIL 12
SCALE 3/4" = 1'-0"

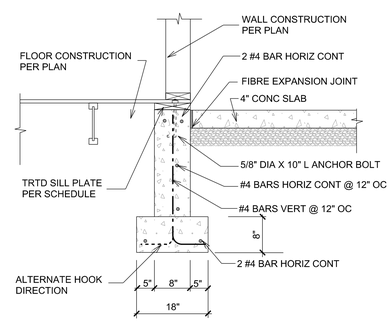

DETAIL 13
SCALE 3/4" = 1'-0"

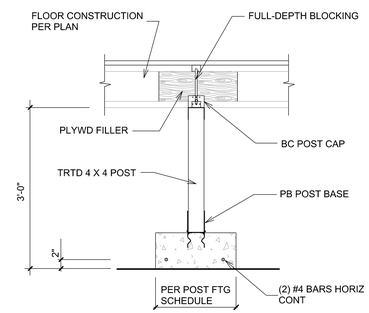

DETAIL 14
SCALE 3/4" = 1'-0"

REVISION EDITION	
1	
2	
3	
4	

DRAWN BY:
CHECKED BY: A.G.
DATE: 11-30-2021

PHONE 425-351-5999
P.O. BOX 7353
BELLEVUE, WA 98008

K I A C O
CONSULTING STRUCTURAL ENGINEERS

PROPOSED NEW RESIDENCE
EDWARD & CATHERINE MORAN
5028 WEST MERCER WAY
MERCER ISLAND, WA 98040

FOUNDATION DETAILS

SHEET
S-3
OF
-

JOB #

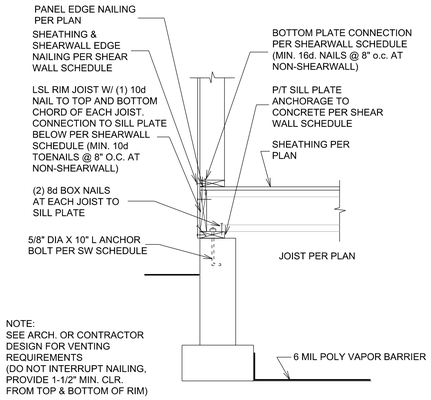

NOTE:
SEE ARCH. OR CONTRACTOR DESIGN FOR VENTING REQUIREMENTS
(DO NOT INTERRUPT NAILING, PROVIDE 1-1/2" MIN. CLR. FROM TOP & BOTTOM OF RIM)

NOTE:
SEE ARCHITECTURAL DRAWINGS FOR FOUNDATION DESIGN ON SHT. S-2

DETAIL 1
SCALE 3/4" = 1'-0"

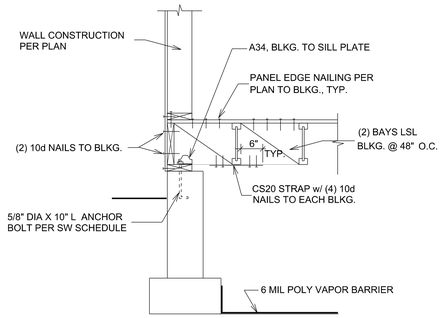

NOTE:
SEE ARCHITECTURAL DRAWINGS FOR FOUNDATION DESIGN ON SHT S-2

DETAIL 2
SCALE 3/4" = 1'-0"

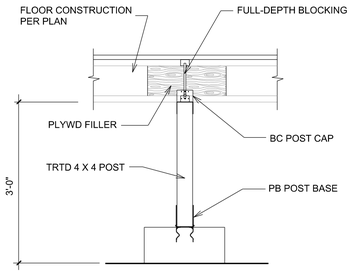

DETAIL 3
SCALE 3/4" = 1'-0"

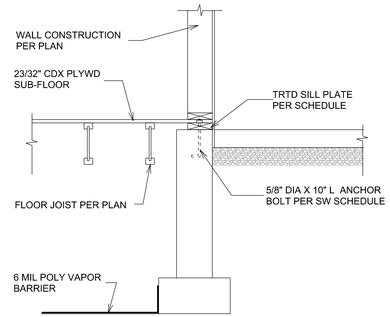

DETAIL 4
SCALE 3/4" = 1'-0"

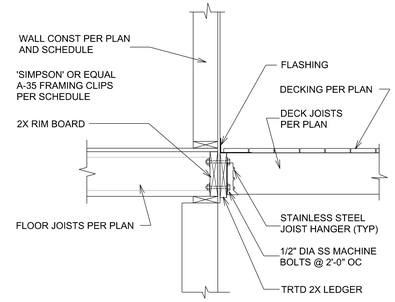

DETAIL 5
SCALE 3/4" = 1'-0"

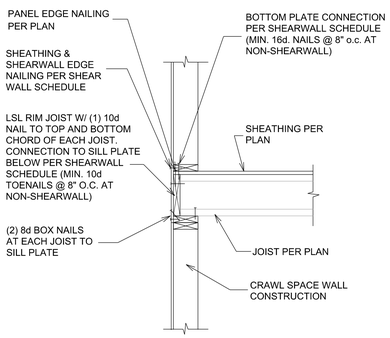

DETAIL 6
SCALE 3/4" = 1'-0"

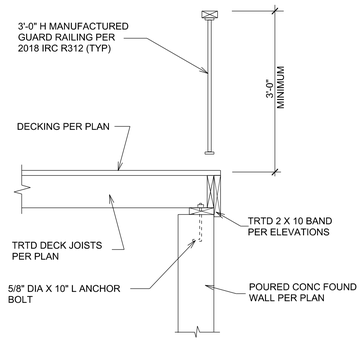

DETAIL 7
SCALE 3/4" = 1'-0"

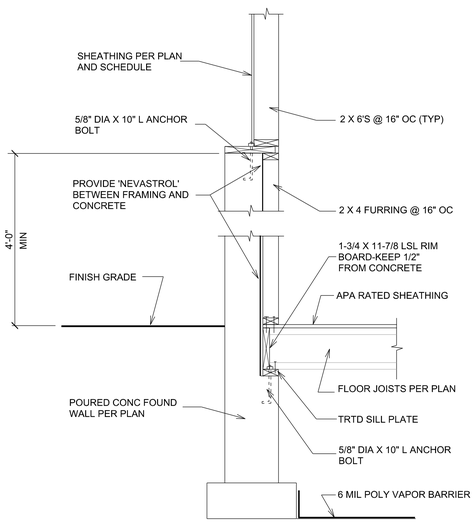

DETAIL 8
SCALE 3/4" = 1'-0"

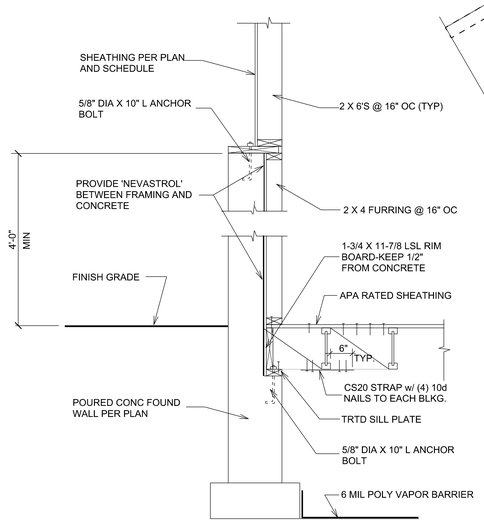

DETAIL 9
SCALE 3/4" = 1'-0"

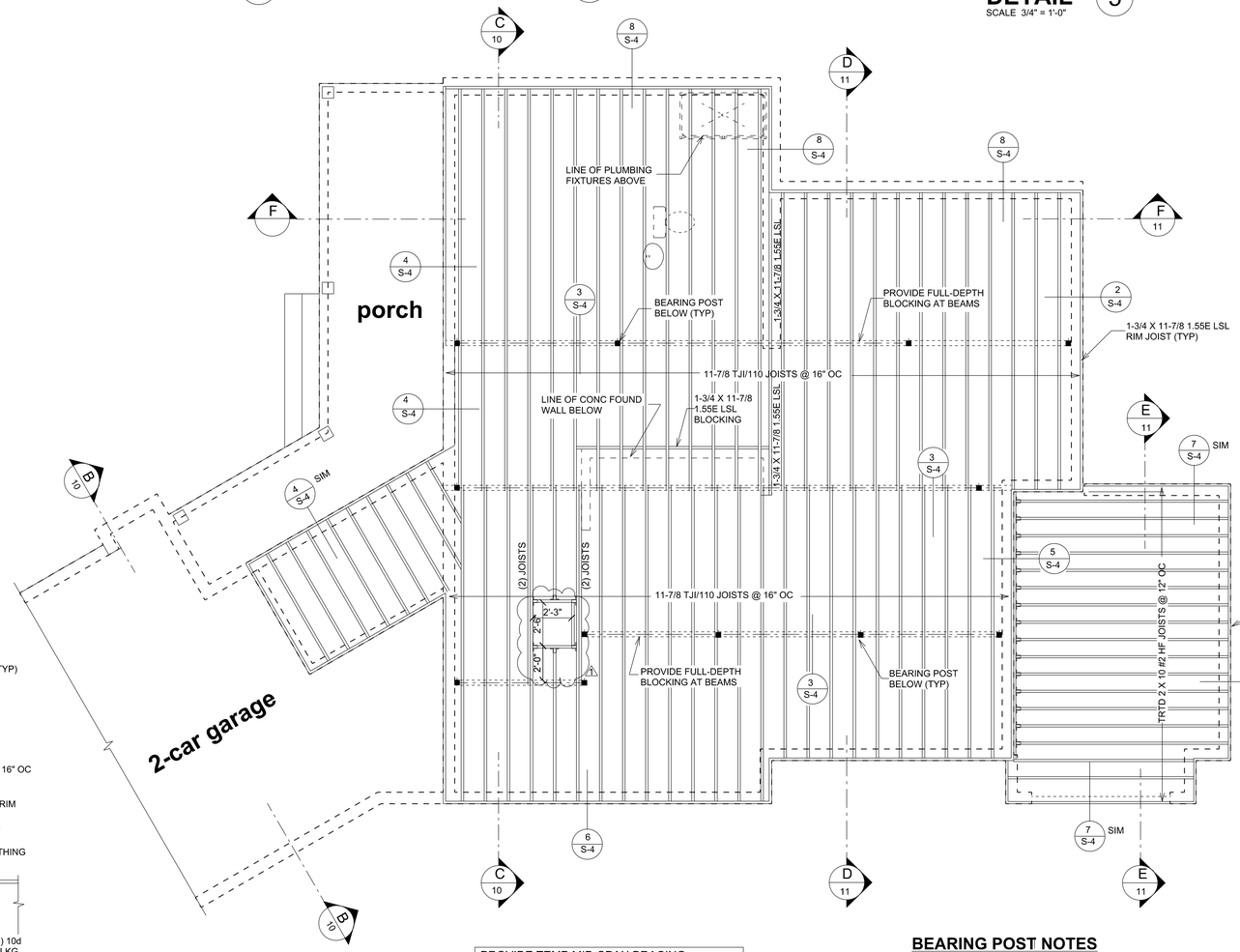

PROVIDE TEMP MID-SPAN BRACING FOR LSL AND PSL BEAMS AT SPANS OVER 12'-0".

ALL BEARING POSTS TO CONTINUE DOWN TO FOUNDATION EITHER DIRECTLY OR INDIRECTLY THROUGH BEAMS OR HEADERS BELOW

BEARING POST NOTES

STAND ALONE BEARING POSTS BEARING ON CONCRETE TO USE ABU OR EQUAL POST BASE AND BC POST CAP TO BEAM ABOVE, U.N.O.

BEARING POSTS BEARING ON WOOD OR EMBEDED IN WALL FRAMING TO USE RPBZ OR EQUAL POST BASE AND BC POST CAP TO BEAM ABOVE.

SEE SHEET NOS. S-7 & S-8 FOR SHEAR WALL PLANS, SCHEDULE AND NOTES

MAIN LEVEL FLOOR FRAMING PLAN
SCALE 1/4" = 1'-0"

NORTH

REVISION EDITION	
1	1 12/08/2022
2	
3	
4	

DRAWN BY:
CHECKED BY: A.G.
DATE: 11-30-2021

PHONE 425-351-9999
FAX 425-351-9955
BELLEVUE, WA 98008

K I A C O
CONSULTING STRUCTURAL ENGINEERS

PROPOSED NEW RESIDENCE
EDWARD & CATHERINE MORAN
5028 WEST MERCER WAY
MERCER ISLAND, WA 98040

MAIN LEVEL FLOOR FRAMING

ALIREZA GHASSEMIKIA
STATE OF WASHINGTON
21455
REGISTERED
PROFESSIONAL ENGINEER

SHEET
S-4
OF
-

JOB #

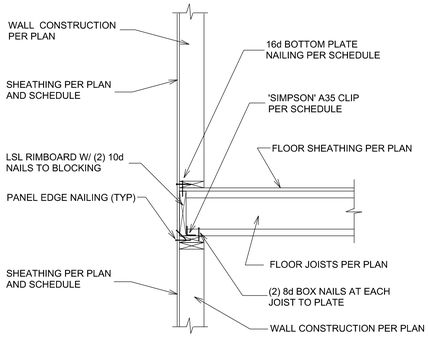

DETAIL 1
SCALE 3/4" = 1'-0"

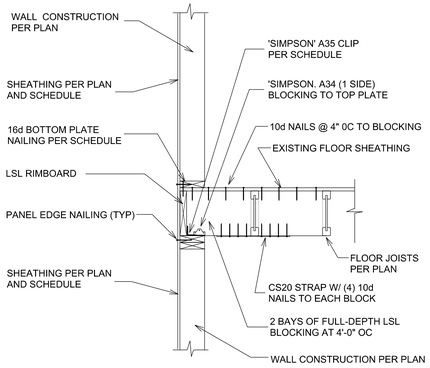

DETAIL 2
SCALE 3/4" = 1'-0"

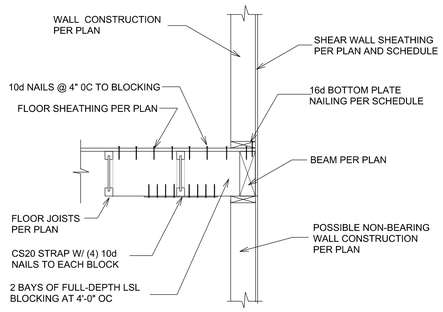

DETAIL 3
SCALE 3/4" = 1'-0"

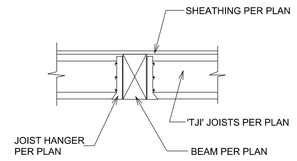

DETAIL 4
SCALE 3/4" = 1'-0"

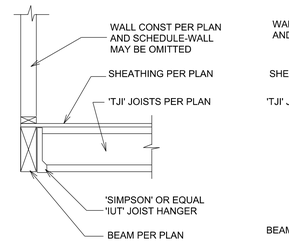

DETAIL 5
SCALE 3/4" = 1'-0"

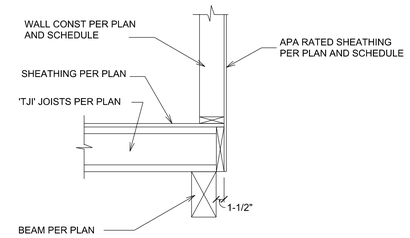

DETAIL 6
SCALE 3/4" = 1'-0"

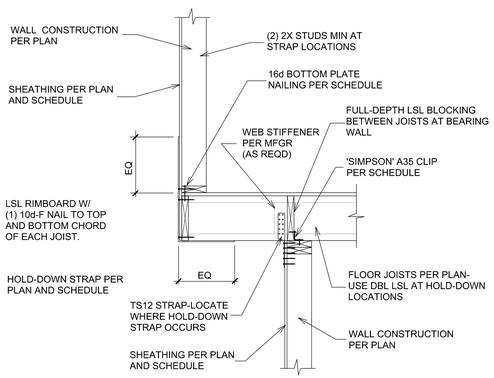

DETAIL 7
SCALE 3/4" = 1'-0"

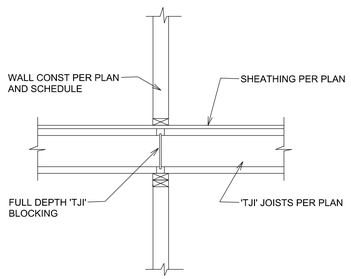

DETAIL 8
SCALE 3/4" = 1'-0"

DETAIL 9
SCALE 3/4" = 1'-0"

DETAIL 10
SCALE 3/4" = 1'-0"

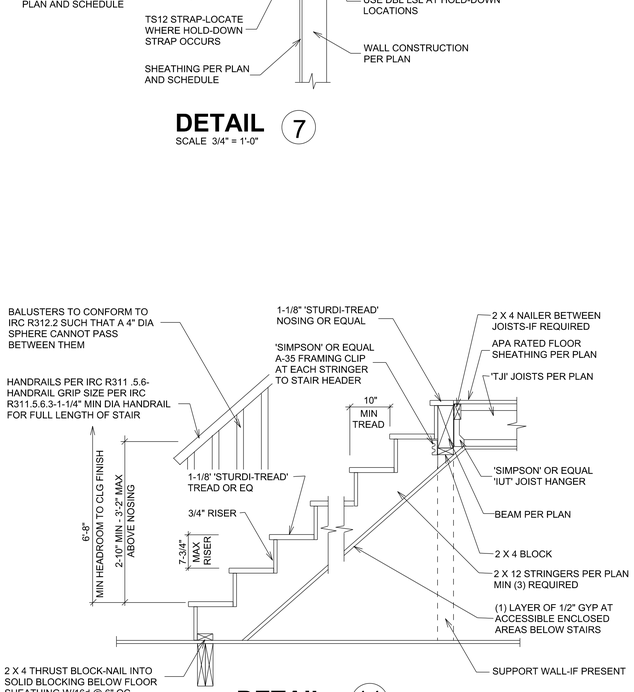

DETAIL 11
SCALE 3/4" = 1'-0"

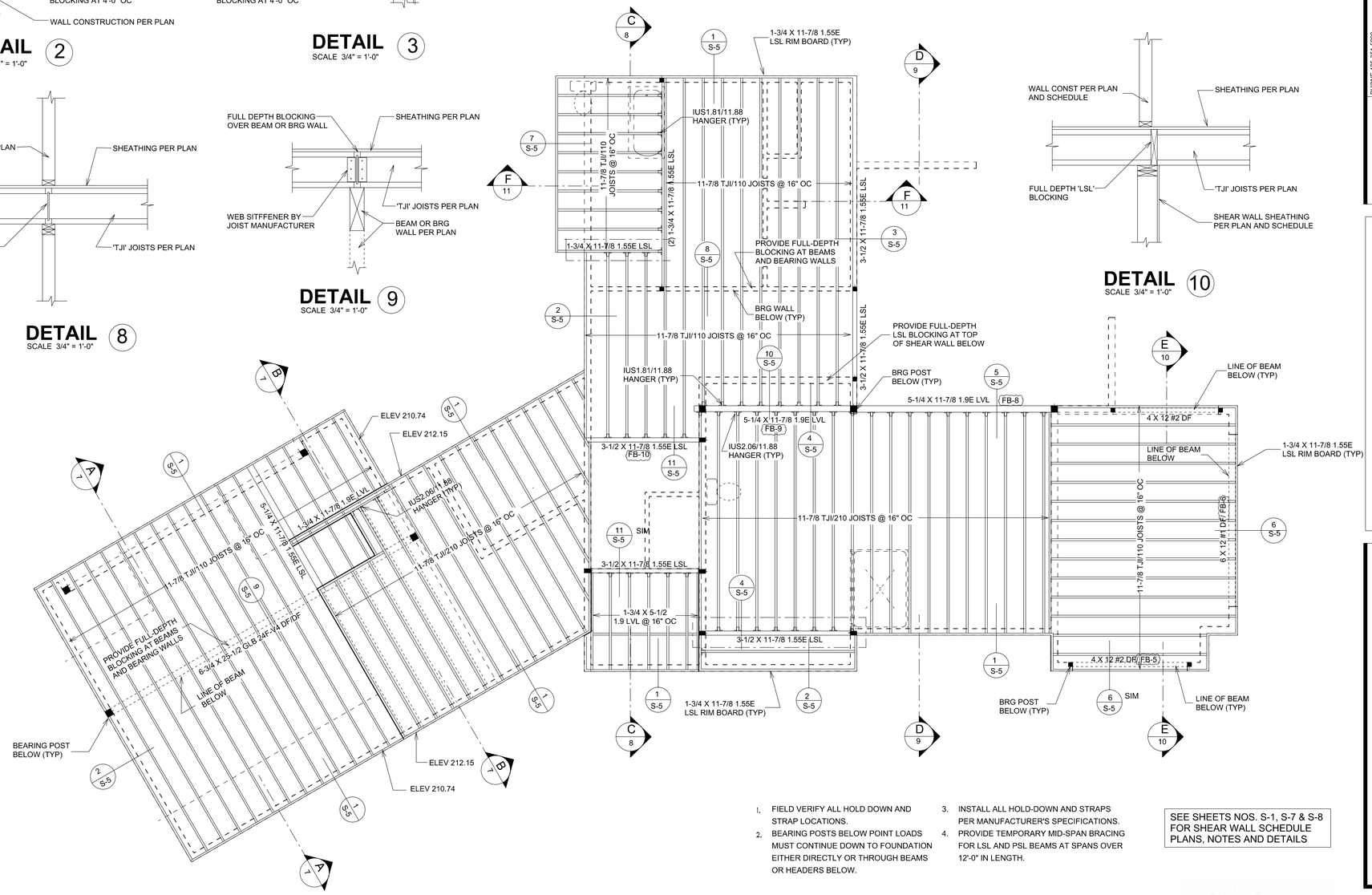

UPPER LEVEL FLOOR FRAMING PLAN
SCALE 1/4" = 1'-0"

NORTH

1. FIELD VERIFY ALL HOLD DOWN AND STRAP LOCATIONS.
2. BEARING POSTS BELOW POINT LOADS MUST CONTINUE DOWN TO FOUNDATION EITHER DIRECTLY OR THROUGH BEAMS OR HEADERS BELOW.
3. INSTALL ALL HOLD-DOWN AND STRAPS PER MANUFACTURER'S SPECIFICATIONS.
4. PROVIDE TEMPORARY MID-SPAN BRACING FOR LSL AND PSL BEAMS AT SPANS OVER 12'-0" IN LENGTH.

SEE SHEETS NOS. S-1, S-7 & S-8 FOR SHEAR WALL SCHEDULE PLANS, NOTES AND DETAILS

BEARING POST NOTES

STAND ALONE BEARING POSTS BEARING ON CONCRETE TO USE ABU OR EQUAL POST BASE AND BC POST CAP TO BEAM ABOVE, U.N.O.

BEARING POSTS BEARING ON WOOD OR EMBEDED IN WALL FRAMING TO USE RPBZ OR EQUAL POST BASE AND BC POST CAP TO BEAM ABOVE, U.N.O.

REVISION EDITION	
1	12/08/2022
2	
3	
4	

DRAWN BY:
CHECKED BY: A.G.
DATE: 11-30-2021

PHONE 425-351-5999
P.O. BOX 2755
BELLEVUE, WA 98008

K I A C O
CONSULTING STRUCTURAL ENGINEERS

PROPOSED NEW RESIDENCE
EDWARD & CATHERINE MORAN
5000 WEST MERCER WAY
MERCER ISLAND, WA 98040

UPPER LEVEL FLOOR FRAMING

SHEET
S-5
OF
-

JOB #

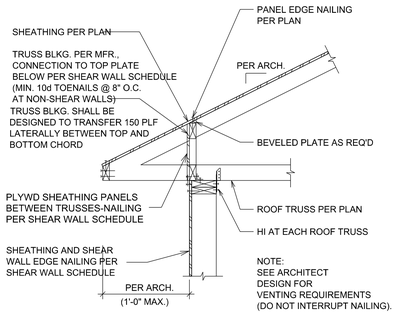

DETAIL 1
SCALE 3/4" = 1'-0"

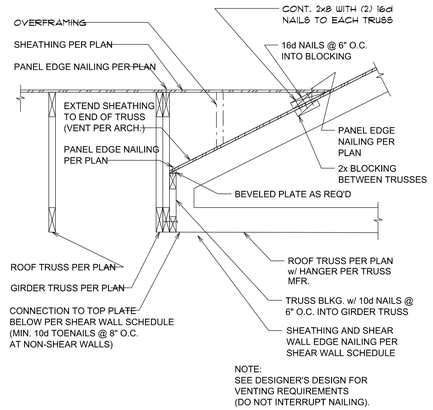

DETAIL 2
SCALE 3/4" = 1'-0"

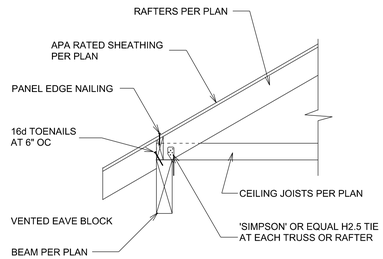

DETAIL 3
SCALE 3/4" = 1'-0"

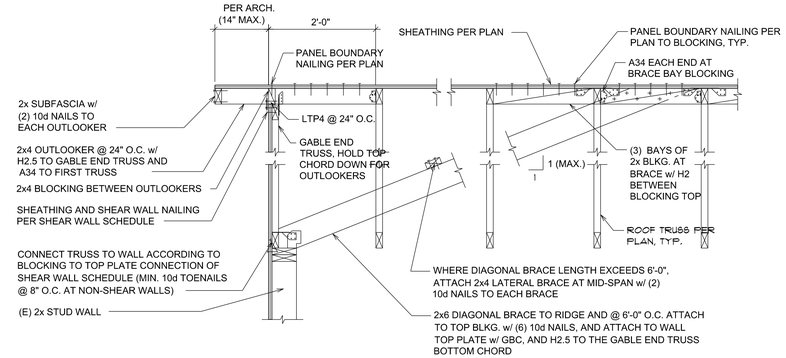

TYPICAL ROOF TRUSS TO EXTERIOR WALL - TRUSS PARALLEL 4

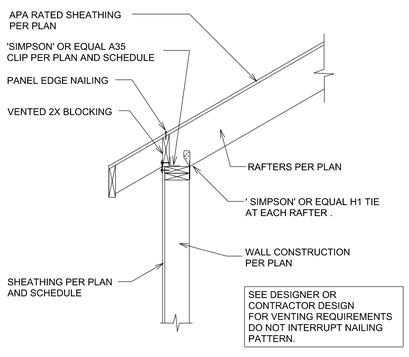

DETAIL 5
SCALE 1/4" = 1'-0"

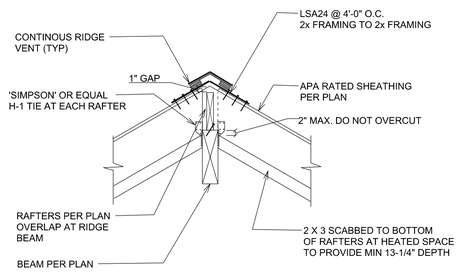

DETAIL 6
SCALE 3/4" = 1'-0"

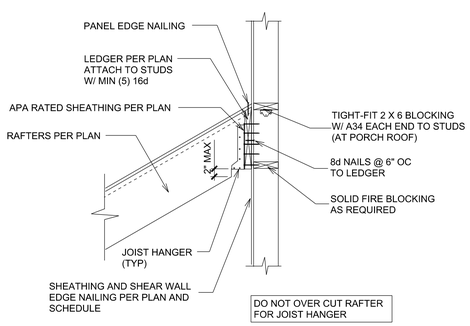

DETAIL 7
SCALE 3/4" = 1'-0"

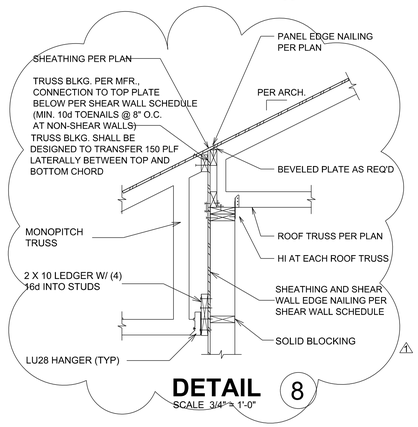

DETAIL 8
SCALE 3/4" = 1'-0"

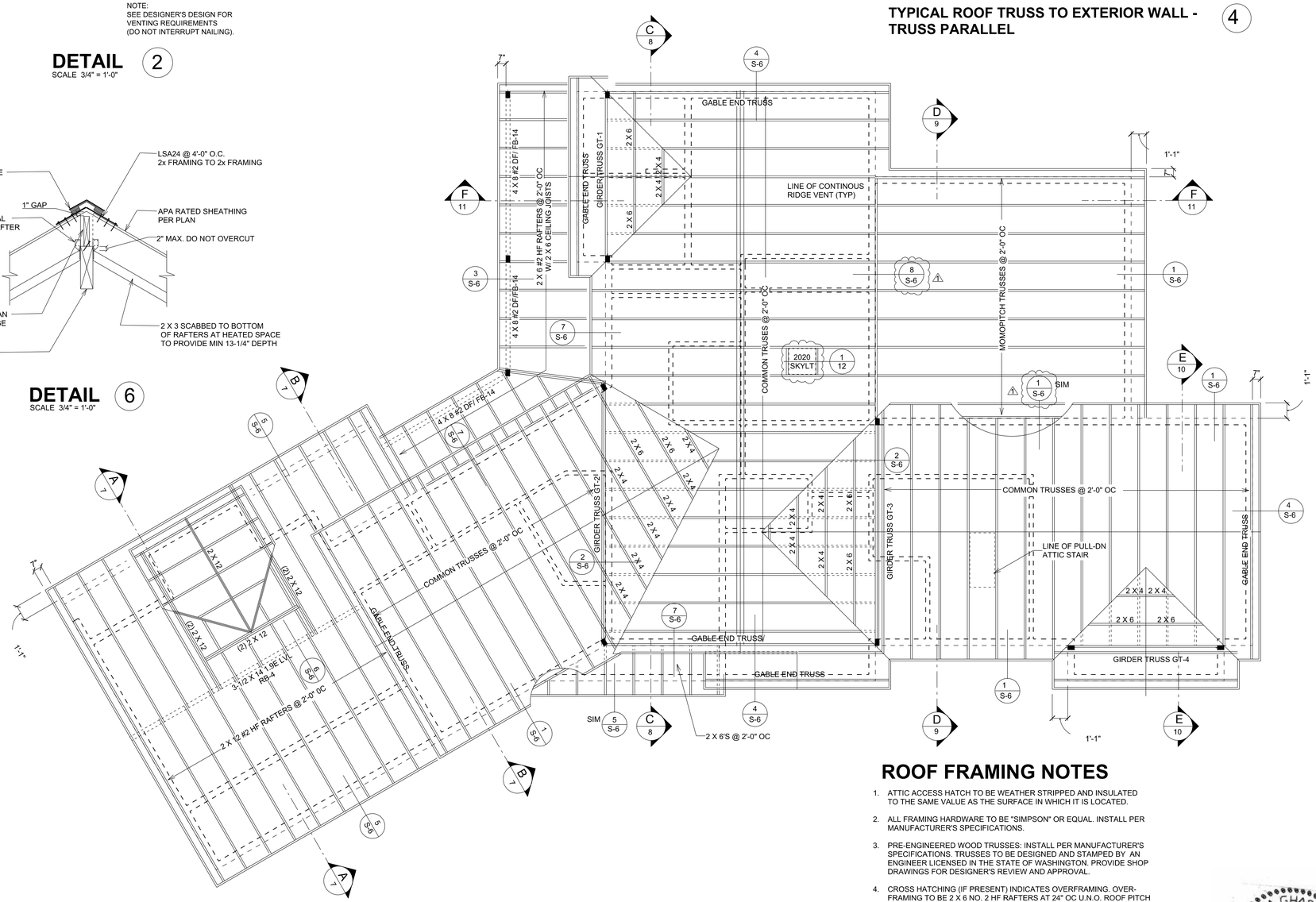

ROOF FRAMING PLAN
SCALE 1/4" = 1'-0"

NORTH

ROOF FRAMING NOTES

1. ATTIC ACCESS HATCH TO BE WEATHER STRIPPED AND INSULATED TO THE SAME VALUE AS THE SURFACE IN WHICH IT IS LOCATED.
2. ALL FRAMING HARDWARE TO BE "SIMPSON" OR EQUAL. INSTALL PER MANUFACTURER'S SPECIFICATIONS.
3. PRE-ENGINEERED WOOD TRUSSES: INSTALL PER MANUFACTURER'S SPECIFICATIONS. TRUSSES TO BE DESIGNED AND STAMPED BY AN ENGINEER LICENSED IN THE STATE OF WASHINGTON. PROVIDE SHOP DRAWINGS FOR DESIGNER'S REVIEW AND APPROVAL.
4. CROSS HATCHING (IF PRESENT) INDICATES OVERFRAMING. OVER-FRAMING TO BE 2 X 6 NO. 2 HF RAFTERS AT 24" OC U.N.O. ROOF PITCH PER PLAN.
5. ALL POST DOWNS TO BE POSITIVELY CONNECTED WITH "SIMPSON" OR EQUAL FRAMING ANCHORS.
6. PROVIDE "SIMPSON" OR EQUAL H1 TIE AT EACH END OF RAFTER OR TRUSS .
7. ROOF SHEATHING SHALL BE MINIMUM 7/16" APA RATED SHEATHING WITH A PANEL INDEX OF 24/0. NAIL TO FRAMING WITH 8d COMMON NAILS AT 4' OC AT PANEL EDGES AND 12' OC IN THE FIELD.

REVISION EDITION		
1	1	12/08/2022
2		
3		
4		

DRAWN BY:
CHECKED BY: A.G.
DATE: 11-30-2021

PHONE 425-351-5999
P.O. BOX 7255
BELLEVUE, WA 98008

K.I.A. C.O.
CONSULTING STRUCTURAL ENGINEERS

PROPOSED NEW RESIDENCE
EDWARD & CATHERINE MORAN
5028 WEST MERCER WAY
MERCER ISLAND, WA 98040

ROOF FRAMING PLAN

SHEET
S-6
OF
-

JOB #

SHEAR WALL SCHEDULE (DOUG FIR STUDS, TOP & BOTTOM PLATES

MARK	SHEATHING	BLOCKING	NOMINAL THICKNESS OF SINGLE BLOCKING, SILL PLATE	NAIL SIZE	NAIL SPACING		CONNECTION OF JOISTS TO BLOCKING TO TOP PLATES	NOMINAL THICKNESS OF SINGLE BLOCKING, RIM JOIST	BOTTOM PLATE CONNECTION		SHEAR CAPACITY (LB/FT)
					EDGE	FIELD			WOOD	CONCRETE	
P-1	7/16" APA RATED SHEATHING (ONE SIDE)	YES	2"	8d COMMON	6"	12"	A-35 @ 18" oc	2"	16d @ 6" oc	5/8" AB @ 32" oc	280
P-2	7/16" APA RATED SHEATHING (ONE SIDE)	YES	2"	8d COMMON	4"	12"	A-35 @ 12" oc	2"	16d @ 4" oc	5/8" AB @ 24" oc	430
P-3	7/16" APA RATED SHEATHING (ONE SIDE)	YES	3"	8d COMMON	3"	12"	A-35 @ 9" oc	2"	16d @ 3" oc	5/8" AB @ 18" oc	550
P-4	7/16" APA RATED SHEATHING (ONE SIDE)	YES	3"	8d COMMON	2"	12"	A-35 @ 6" oc	3"	(2) ROWS OF 16d @ 5" oc	5/8" AB @ 12" oc	730

SHEAR WALL & HOLD-DOWN NOTES (U.N.O.)

1. APA RATED SHEATHING SHALL BE EXP1/EXP2/EXT OR C-C/C-D/STRUCT II, SPAN RATING 24/0.
2. PLYWOOD AT SHEAR WALLS MAY BE LAID WITH FACE GRAIN PARALLEL OR PERPENDICULAR TO WALL STUDS.
3. FASTENERS SHALL BE DRIVEN FLUSH WITH SURFACE OF SHEATHING AND HAVE MINIMUM 3/8" EDGE DISTANCE.
4. PROVIDE PLYWOOD EDGE NAILING TO ALL POSTS INSIDE SHEAR WALLS.
5. NAIL END STUDS ALL OF ALL SHEAR WALLS TO TRANVERSE BEARING WALLS WITH 16d NAILS AT 4" OC (MIN).
6. OFFSET PANEL JOINTS ON EACH SIDE OF WALL MINIMUM ONE STUD BAY AT SHEAR WALL PB.
7. USE 1/4" X 3" X 3" PLATE WASHERS ON ALL ANCHOR BOLTS.
8. SOLID BLOCKING SHALL BE INSTALLED AT ALL PLYWOOD JOINTS.
9. BOTTOM PLATE SHALL BE 3X NOMINAL AT SHEAR WALLS P3 AND P4.
10. STUDS AND BLOCKING AT PLYWOOD JOINTS SHALL BE 3X NOMINAL AT SHEAR WALLS P3 AND P4.
11. FOR DOUBLE ROWS OF BOTTOM PLATE NAILS, PROVIDE DOUBLE RIM BOARD OR BLOCKING BELOW.

NAIL DESCRIPTION	NAIL SIZE
8d COMMON	0.131" DIA X 2-1/2" LONG
10d COMMON	0.148" DIA X 3" LONG
16d COMMON	0.162" DIA X 3-1/2" LONG

HOLD-DOWN SCHEDULE

HOLD-DOWN OR STRAP	POST/END STUD (MIN)	NAILS/BOLTS
CS16	2X	(22) 10d X 2-1/2"
(2) CS16	(2) 2X	(44) 10d X 2-1/2"
CMSTC16	(2) 2X	(50) 10d X 3-1/4"
HTT5	(2) 2 X 6 OR 4 X 6	(26) 16d X 1-1/2" SIMPSON SB 5/8" X 24 BOLT
HDQ8	4 X 6	(20) 1/4" X 3" SDS SCREWS SIMPSON SB 1" X 30" BOLT
STHD10/10RJ	(2) 2X	(28) 10d X 3-1/4"
STHD14/14RJ	(2) 2X	(30) 10d X 3-1/4"

Please revise this image. Appears to have been skew plotted.

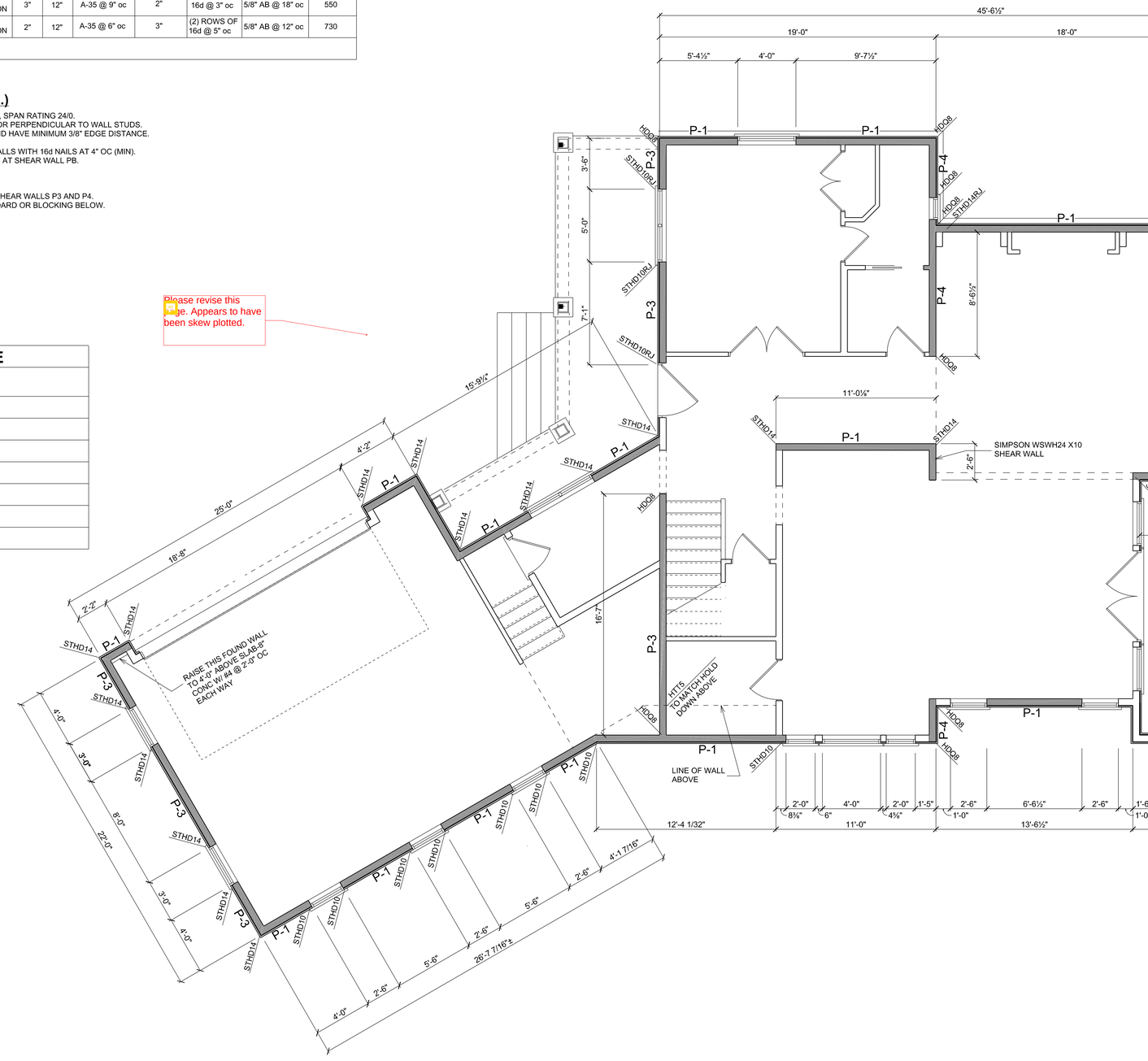

MAIN LEVEL SHEAR WALL PLAN

SCALE 1/4" = 1'-0"

NORTH

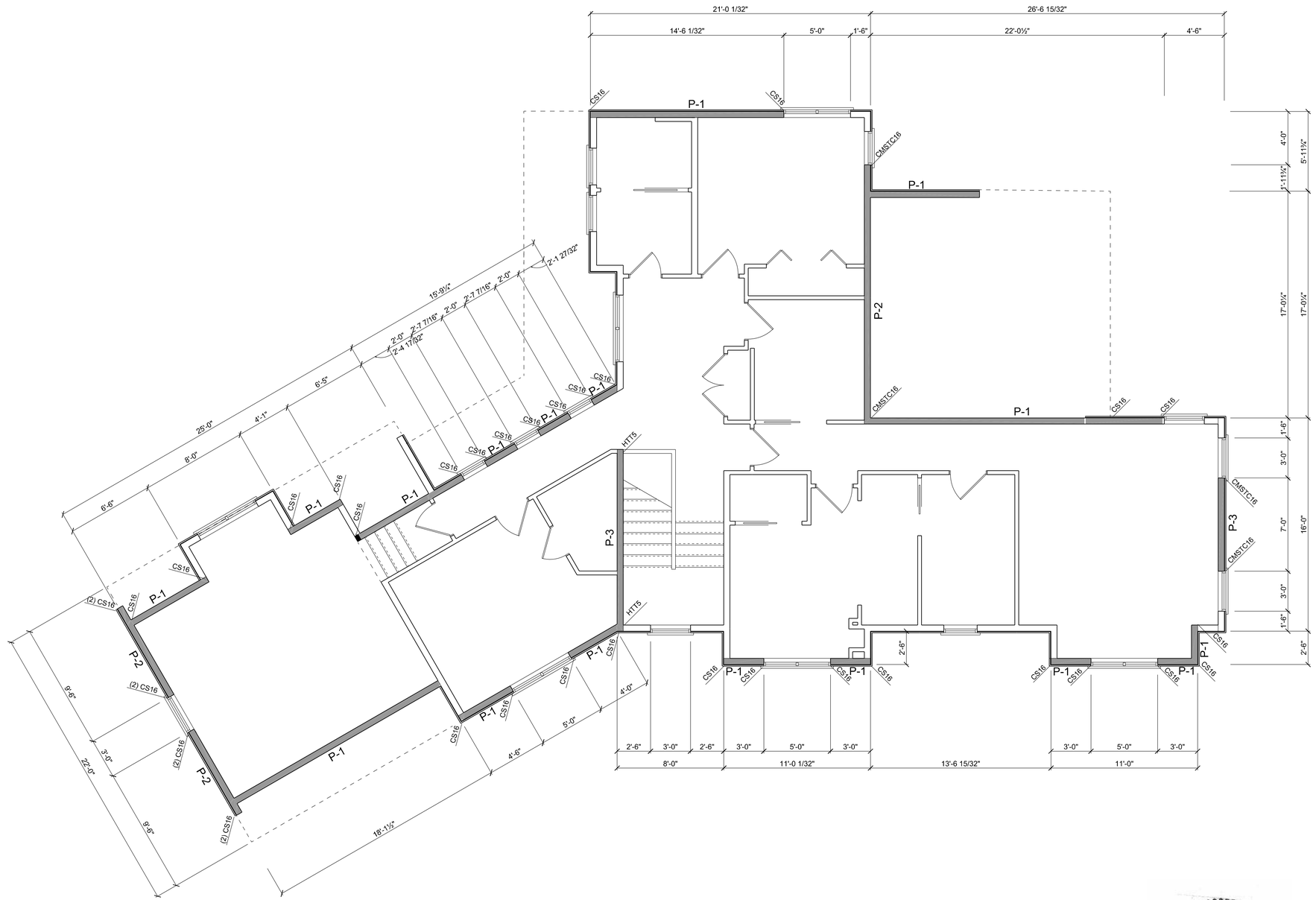

UPPER LEVEL SHEAR WALL PLAN

SCALE 1/4" = 1'-0"

NORTH

PHONE 425-351-5999
P.O. BOX 7255
BELLEVUE, WA 98008

K I A C O
CONSULTING STRUCTURAL ENGINEERS

DRAWN BY:	REVISION EDITION
CHECKED BY: A.G.	1
DATE: 11-30-2021	2
	3
	4

PROPOSED NEW RESIDENCE
EDWARD & CATHERINE MORAN
5028 WEST MERCER WAY
MERCER ISLAND, WA 98040

UPPER LEVEL SHEAR WALLS

SHEET
S-8
OF
-

JOB #

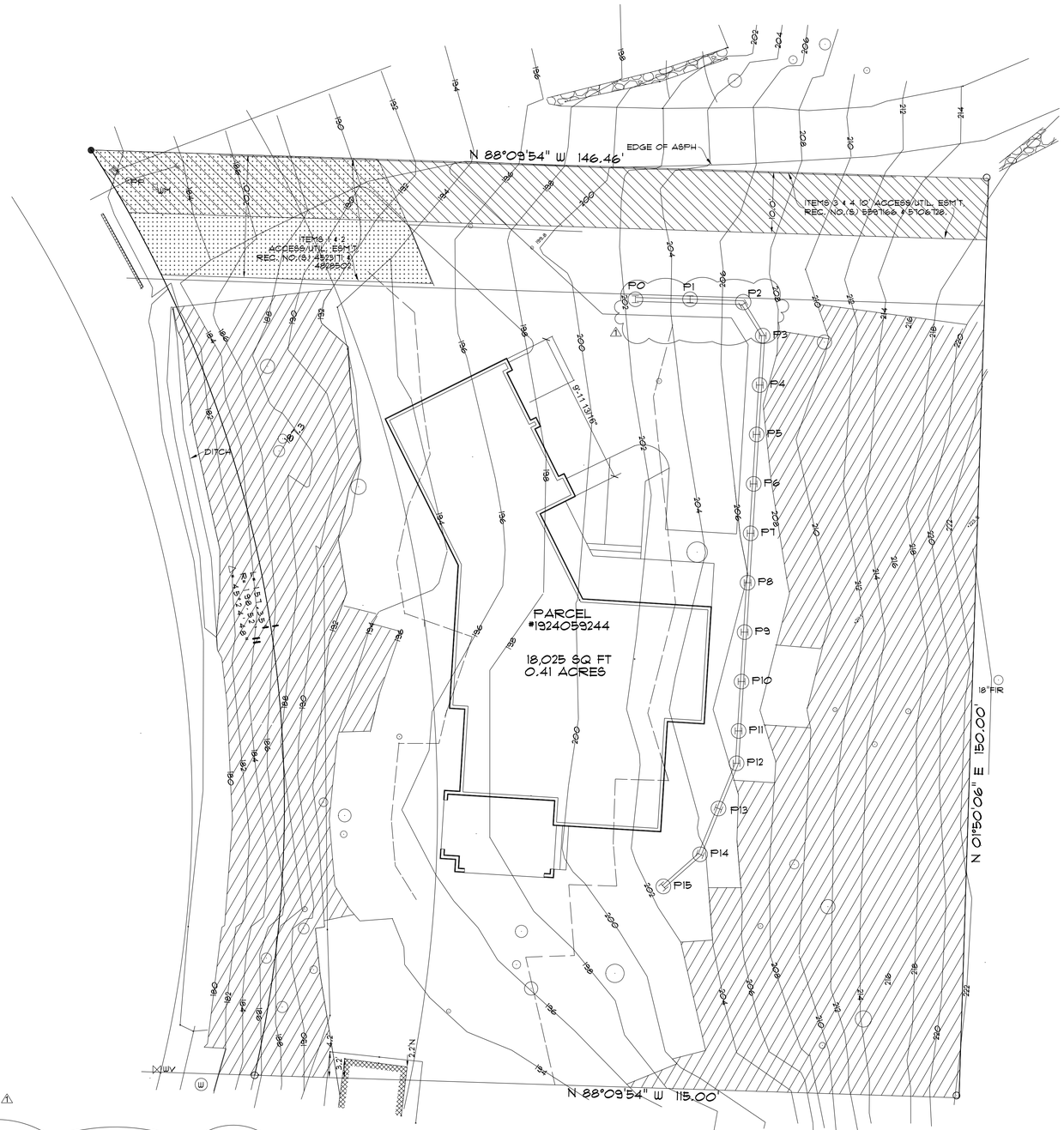

CROSS HATCHING INDICATES STEEP SLOPE AREAS

DASHED LINES INDICATE STEEP SLOPE BUFFER

SHORING PLAN

SCALE: 1"=10'-0"

PILE SCHEDULE

"H" (FT) MAX. HT	"D" (FT) MIN. EMBED	PILE SECTION Fy=50 KSI	AUGER DIAMETER (INCHES)	SPACING ON CENTER	PILE NUMBER
6'-6" OR LESS	13'-0"	W16X26	30"	8'-0"	P0, P15
8'-6"	16'-0"	W16X31	30"	8'-0"	P1, P2
10'-6"	20'-0"	W16X50	30"	8'-0"	P3, P4, P5, P6, P7, P8
12'-0"	27'-0"	W16X100	30"	8'-0"	P9, P10, P11, P12, P13, P14,

1. SEE SOIL'S REPORT FOR RECOMMENDATIONS DURING EXCAVATION AND TEMPORARY SHORING.
2. MAXIMUM TEMPORARY CUT SLOPE IS: 1.5H:1V
3. CONTRACTOR MAY REVISE THE NUMBER OF PILES ACCORDING TO SITE CONDITION WITH SOIL'S ENGINEER AND STRUCTURAL ENGINEER APPROVAL.
4. SOIL'S ENGINEER SHALL INSPECT AND APPROVE ALL EXCAVATION AND PILE PLACEMENT. PROVIDE SPECIAL INSPECTION BY GEOTECH PER 2018 IBC.

PHONE 425-351-6999
P.O. BOX 7255
BELLEVUE, WA 98008

K I A , C O
CONSULTING STRUCTURAL ENGINEERS

DRAWN BY:	REVISION EDITION	
CHECKED BY: A.G.	1	12/08/2022
DATE: 11-30-2021	2	
	3	
	4	

PROPOSED NEW RESIDENCE
EDWARD & CATHERINE MORAN
5028 WEST MERCER WAY
MERCER ISLAND, WA 98040

SHORING WALL PLAN

SHEET
SH-1
OF
-

JOB # 117-2101

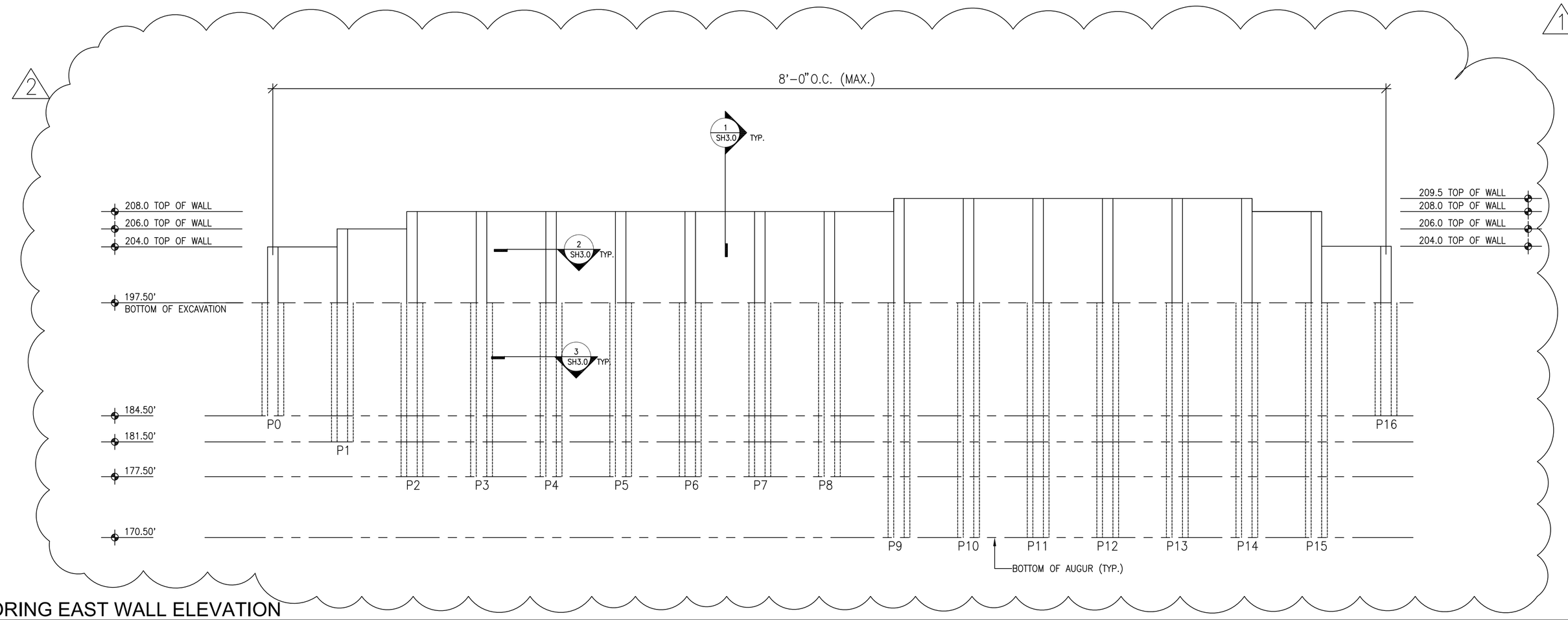

1 SHORING EAST WALL ELEVATION

SCALE: 1/8"=1'-0"

NOTES:

1. SAFETY FACTOR = 1.5 (PER SOIL'S REPORT)
2. MINIMUM EMBEDMENT SOLDIER PILE BELOW THE BASE OF EXCAVATIONS PER PILE SCHEDULE ON SHEET SH-1.
3. PASSIVE EARTH PRESSURE IS TAKEN OVER 2-PILE DIAMETERS.
4. EARTH PRESSURE ON LAGGING BETWEEN SOLDIER PILES IS REDUCED BY 50% PER SOIL'S REPORT.
5. MAXIMUM PILE SPACING IS 8'-0".
6. CONTRACTOR TO VERIFY EXISTING GRADES.
7. SEE SOIL'S REPORT FOR RECOMMENDATION DURING EXCAVATION AND TEMPORARY SHORING.
8. SOIL'S ENGINEER SHALL PORVIDE SPECIAL INSPECTION PER 2018 IBC.
9. PROVIDE SURVEY MONITORING PROGRAM AS REQUIRED BY THE SOIL'S ENGINEER.
10. REFER SOIL'S REPORT FOR MAINTANANCE SCHEDULE AND DEBRIES CLEAN UP.

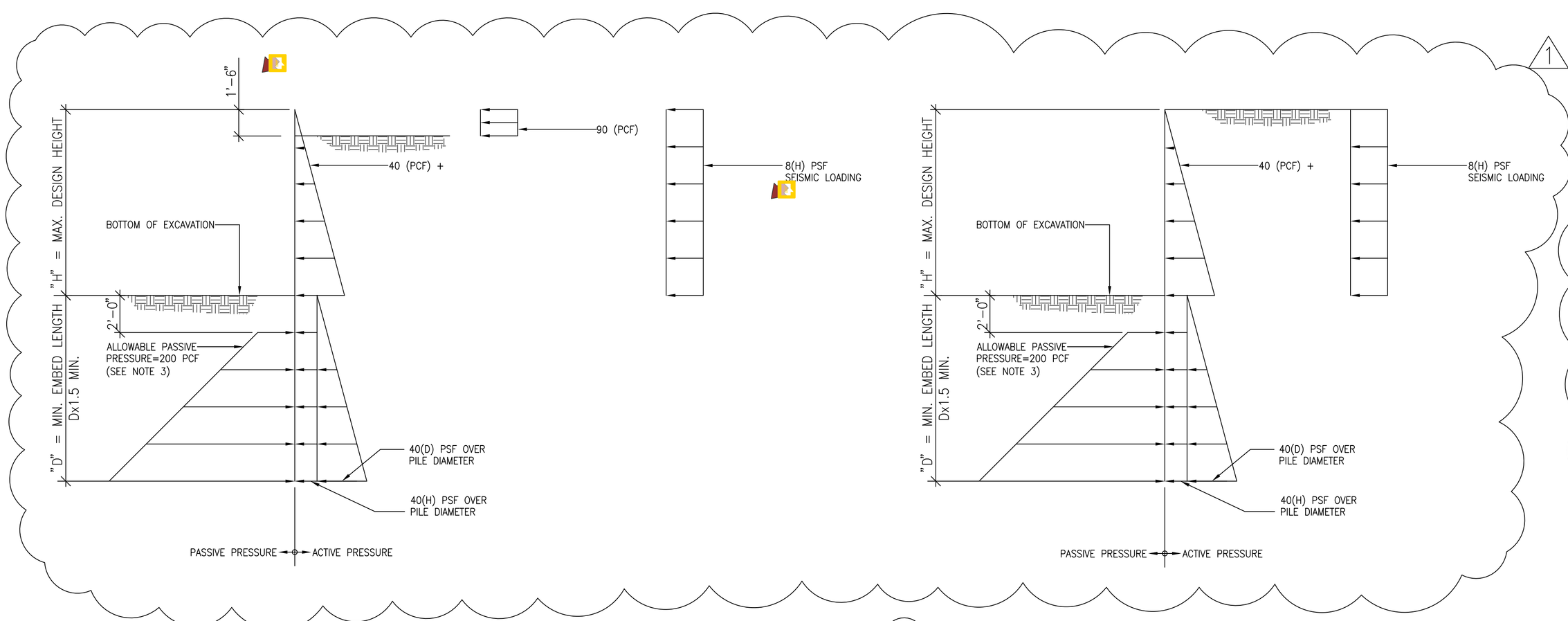

3 SOIL PRESSURE DIAGRAM (P1 THRU P8 & P16)

2 SOIL PRESSURE DIAGRAM (P9 THRU P15)

PILE SCHEDULE

"H" (FT) MAX. HT	"D" (FT) MIN. EMBED	PILE SECTION Fy=50 KSI	AUGER DIAMETER (INCHES)	SPACING ON CENTER	PILE NUMBER
6'-6" OR LESS	13'-0"	W16X26	30"	8'-0"	P0, P16
8'-6"	16'-0"	W16X31	30"	8'-0"	P1, P2
10'-6"	20'-0"	W16X50	30"	8'-0"	P3, P4, P5, P6, P7, P8,
12'-0"	27'-0"	W16X100	30"	8'-0"	P9, P10, P11, P12, P13, P14, P15,

REVISION EDITION

1	BLDG DEPT.	9-9-22
2	PILE LAYOUT	12-8-22
3		
4		

DRAWN BY:
CHECKED BY: A.G.
DATE: 11-30-2021

PHONE 425-351-5999
P.O. BOX 7250
BELLEVUE, WA 98008

K I A C O
CONSULTING STRUCTURAL ENGINEERS

PROPOSED SINGLE FAMILY RESIDENCE
EDWARD & CATHERINE MORAN
5000 WEST MERCER WAY
MERCER ISLAND, WA 98040

ELEVATIONS & NOTES

SHEET
SH-2
OF
3

JOB #
171-2101

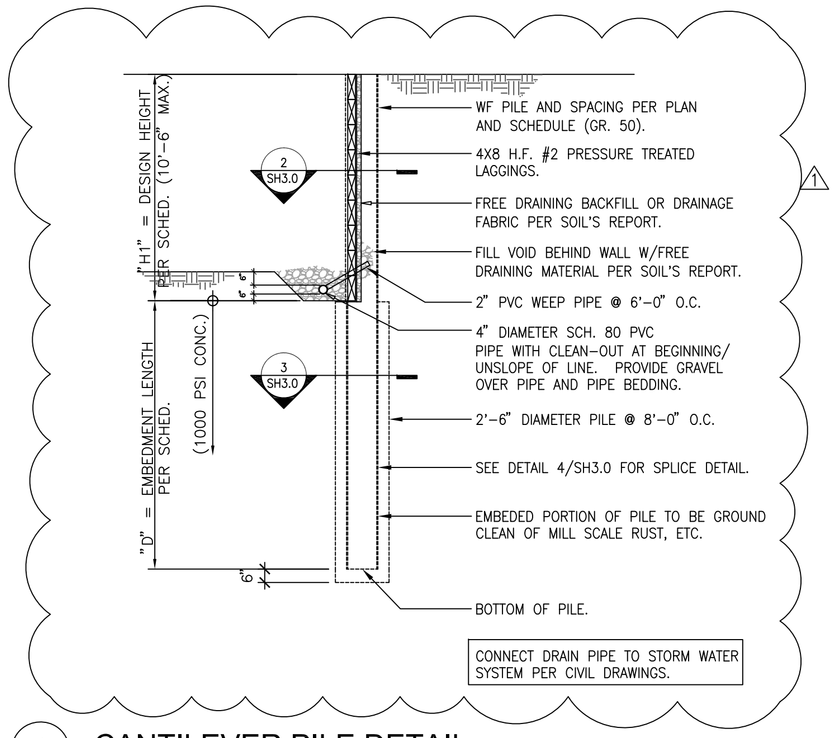

1 CANTILEVER PILE DETAIL

SCALE: 1/4"=1'-0"

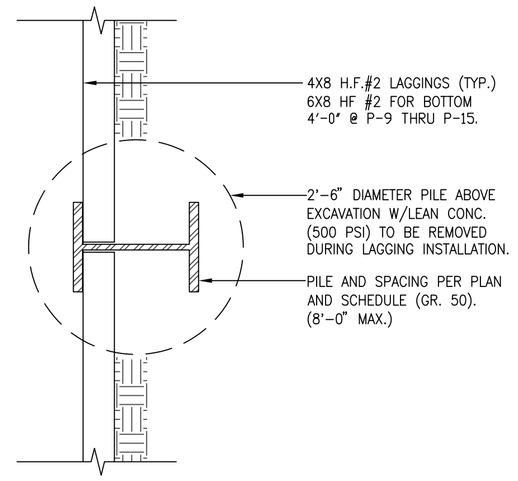

2 PILE SECTION DETAIL

SCALE: 1"=1'-0"

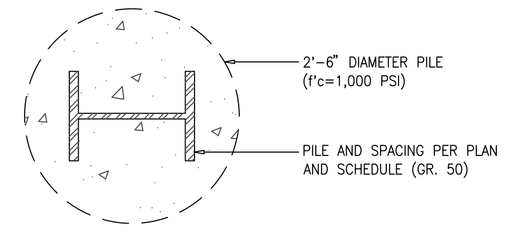

3 PILE SECTION DETAIL

SCALE: 1"=1'-0"

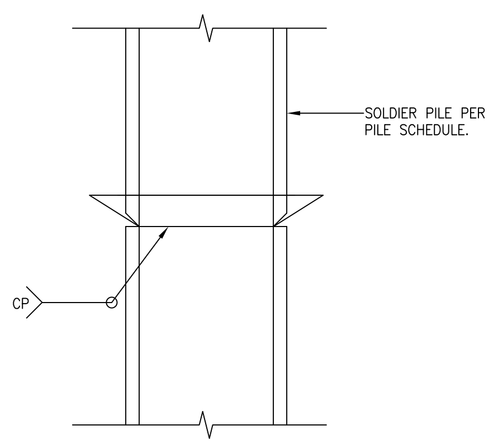

4 SOLDIER PILE SPLICE DETAIL

SCALE: 1 1/2"=1'-0"

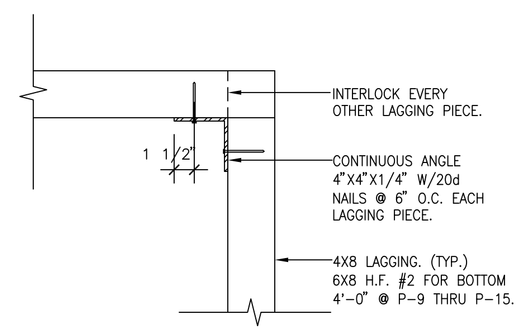

5 CORNER DETAIL

SCALE: 1 1/2"=1'-0"

2

PILE SCHEDULE

"H" (FT) MAX. HT	"D" (FT) MIN. EMBED	PILE SECTION Fy=50 KSI	AUGER DIAMETER (INCHES)	SPACING ON CENTER	PILE NUMBER
6'-6" OR LESS	13'-0"	W16X26	30"	8'-0"	P0, P16
8'-6"	16'-0"	W16X31	30"	8'-0"	P1, P2
10'-6"	20'-0"	W16X50	30"	8'-0"	P3, P4, P5, P6, P7, P8,
12'-0"	27'-0"	W16X100	30"	8'-0"	P9, P10, P11, P12, P13, P14, P15,

GENERAL SHORING NOTES

1. CODE REQUIREMENTS: ALL DESIGN AND CONSTRUCTION SHALL CONFORM TO THE REQUIREMENTS OF THE INTERNATIONAL BUILDING CODE, 2015 EDITION.
2. REFERENCE DOCUMENTS: GEOTECHNICAL PROJECT NO. JN16346 BY GEOTECH CONSULTANTS, INC. DATED SEPTEMBER 19, 2016 AND SUPPLEMENTAL LETTER. TOPOGRAPHY AND BOUNDARY SURVEY AS PROVIDED BY THE OWNER.
3. DESIGN LOADS: IN ADDITION TO THE DEAD LOADS, THE SOIL PRESSURES SHOWN ON SHEET SH2.0 WERE USED FOR THE DESIGN.
4. SUBMITTALS: SHOP DRAWINGS SHALL BE SUBMITTED TO THE STRUCTURAL ENGINEER PRIOR TO FABRICATION OR CONSTRUCTION FOR CONC. MIX. DESIGN, STRUCTURAL STEEL, AND MISCELLANEOUS METAL. PROPOSED DEMOLITION AND SHORING SEQUENCE SHALL BE SUBMITTED TO THE ENGINEER FOR APPROVAL.
5. INSPECTION: INSPECTION BY A QUALIFIED SOILS ENGINEER AND APPROVED TESTING LAB WILL BE PROVIDED BY OWNER FOR PILE PLACEMENT. SOIL'S ENGINEER SHALL INSPECT PILE PLACEMENT AND PREPARED SOIL BEARING SURFACES PRIOR TO INSTALLATION OF PILES. SUBMIT DAILY REPORTS TO THE CITY OF BELLEVUE, SOIL'S ENGINEER, AND STRUCTURAL ENGINEER.
6. SPECIAL CONDITION: CONTRACTOR SHALL VERIFY ALL DIMENSIONS AND EXISTING CONDITION IN THE FIELD AND SHALL NOTIFY THE STRUCTURAL ENGINEER OF ALL FIELD CHANGES PRIOR TO FABRICATION AND INSTALLATION.
7. UTILITY LOCATION: THE CONTRACTOR SHALL UTILIZE THE SERVICES OF THE "UTILITY LOCATOR SERVICE" (1-800-424-5555) TO VERIFY THE EXTENT AND LOCATIONS OF SITE UTILITIES. SOLDIER PILES WHICH INTERFERE WITH UTILITIES SHALL BE RELOCATED. NEW PILE LOCATIONS SHALL BE APPROVED BY STRUCTURAL ENGINEER.
8. CONCRETE: CONCRETE WORK SHALL CONFORM TO ALL REQUIREMENTS OF THE 2015 INTERNATIONAL BUILDING CODE.

fc' (PSI)	MIN. CEMENT PER CUBIC YARD	USE
1000	1 1/2 SACKS	PILE STRUCTURAL GROUT

AS AN ALTERNATE TO THE ABOVE, THE CONTRACTOR SHALL SUBMIT CONCRETE MIX DESIGNS TO THE STRUCTURAL ENGINEER FOR REVIEW TWO WEEKS PRIOR TO PLACING CONCRETE.

9. STEEL: DESIGN, FABRICATION AND ERECTION SHALL BE IN ACCORDANCE WITH THE FOLLOWING:
   A. SPECIFICATIONS: AISC SPECIFICATIONS FOR THE DESIGN, FABRICATION, AND ERECTION OF STRUCTURAL STEEL FOR BUILDINGS.
   B. WELDING: AWS D1.1, LATEST EDITION. AWS PREQUALIFIED JOINT DETAILS.
   C. WELDER CERTIFICATION: WASHINGTON ASSOCIATION OF BUILDING OFFICIALS (WABO)
   D. WIDE FLANGE: ASTM A 992 (Fy=50,000 PSI)
   E. WELDING ELECTRODES: E70XX
10. TIMBER LAGGGING: LAGGING SHALL CONFORM TO "GRADING RULES," WEST COAST LUMBER INSPECTION BUREAU (WCLIB), LATEST EDITION. LAGGING SHALL BE DOUGLAS FIR-LARCH NO.1 ROUGH CUT ; Fb = 1000 PSI. LAGGING SHALL BE PRESSURE-TREATED WITH WATERBORNE PRESERVATIVES. FIELD CUTS WHICH EXPOSE UNTREATED WOOD ARE TO BE FIELD TREATED IN ACCORDANCE WITH AWPA STANDARDS.
11. SOILS: SEE REPORT OF GEOTECHNICAL INVESTIGATION FOR MORE COMPLETE INFORMATION, INCLUDING RECOMMENDATIONS FOR SHORING IN GENERAL, SHORING, MONITORING, EXCAVATION, DRAINAGE AND SITE PROTECTION.
12. FINAL TOP OF PILE: TOP OF PILES SHALL BE CUT OFF A MINIMUM OF ONE FOOT BELOW TOP OF GRADE.
13. REFER GEOTECHNICAL REPORT DATED9-27-21, MEMORANDUM DATED 8-6-21 AND LETTER DATED 12-17-21 FOR ADDITIONAL INFORMATION. (1)

SHORING PROCEDURE

1. HOLE DIGGING: PILE HOLES SHALL BE DRILLED WITHOUT LOSS OF GROUND AND WITHOUT ENDANGERING PREVIOUSLY INSTALLED PILES. THIS MAY INVOLVE CASING THE HOLES OR OTHER METHODS OF PROTECTION FROM CAVING. SEE GEOTECHNICAL REPORT AND SURVEY FOR POSSIBLE OBSTRUCTIONS AND RECOMMENDATIONS.
2. LAGGING: TIMBER LAGGING SHALL BE INSTALLED AT ALL SHORING WALLS. VOIDS BETWEEN LAGGING AND SOIL SHALL BE BACK FILLED PER SOIL'S REPORT. IT IS THE CONTRACTOR'S RESPONSIBILITY TO LIMIT THE OF EXPOSED SOIL TO 4 FT. OR LESS, ALSO SEE SOIL'S REPORT RECOMMENDATIONS.
3. **DRAINAGE:** INSTALL DRAINAGE TO THE FACE OF THE TIMBER LAGGING FOR TEMPORARY AND PERMANENT SOLDIER PILE WALLS ACCORDING TO RECOMMENDATIONS OF THE 2015 I.B.C. AND AS SPECIFIED IN THE SOIL'S REPORT.
4. **MONITORING:** MONITORING OF THE SHORING SYSTEM, CONDUCTED BY THE GENERAL CONTRACTOR, MUST INCLUDE MEASUREMENTS OF VERTICAL AND HORIZONTAL MOVEMENTS AT THE TOP AND BOTTOM OF EACH SOLDIER PILE ON DAILY BASIS DURING THE EXCAVATION AND WEEKLY BASIS UNTIL WALL CONSTRUCTION IS COMPLETE. ADDITIONAL MONITORING POINTS MAY BE AT THE DIRECTION OF THE SOIL'S ENGINEER AND THE BUILDING DEPARTMENT. ALL READINGS SHOULD BE PROVIDED TO KIA CO., A.D. SHAPIRO ARCHITECTS, P.S., AGES ENGINEERING, LLC. AND BUILDING DEPARTMENT. ALSO, SEE SOIL'S REPORT FOR MONITORING INSTRUCTIONS AND RECOMMENDATIONS.

REVISION EDITION
1 BLDG DEPT. 9-9-21
2 PILE LAYOUT 12-8-22
3
4

DRAWN BY:
CHECKED BY: A.G.
DATE: 11-30-2021

PHONE 425-351-5999
P.O. BOX 7255
BELLEVUE, WA 98008
K I A
CONSULTING STRUCTURAL ENGINEERS

PROPOSED SINGLE FAMILY RESIDENCE
EDWARD & CATHERINE MORAN
5000 WEST MERCER WAY
MERCER ISLAND, WA 98040

PLANS

SHEET
SH-3
OF
3

JOB #
171-2101

ATTACHMENT 1
CITY OF MERCER ISLAND
ON-SITE DETENTION SYSTEM WORKSHEET
(FOR NEW PLUS REPLACED IMPERVIOUS AREA OF 9,500 SF OR LESS)

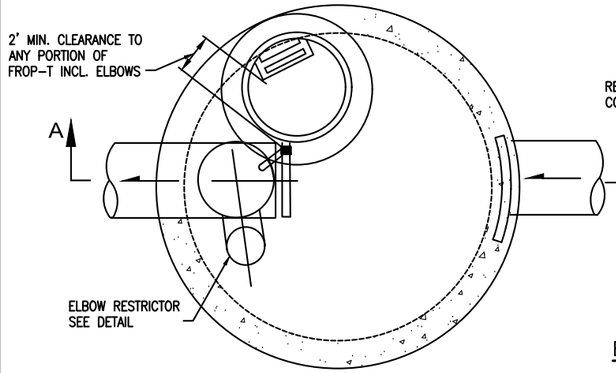

PLAN VIEW

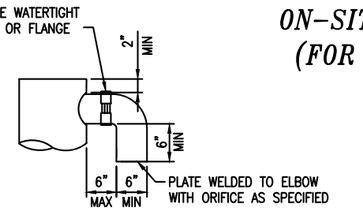

ELBOW RESTRICTOR DETAIL

OWNER: Edward & Cathrine Moran	ADDRESS: 5000 West Mercer Way		PREPARED BY: Justin Jones		
PERMIT #:	Mercer Island, WA		PHONE: 206-596-2020		
			DATE: 04/20/2022		
NEW PLUS REPLACED IMPERVIOUS SURFACE AREA (SF): 3,976 SF	DETENTION PIPE DIA (INCH): 48"	DETENTION PIPE LENGTH (FT): 62	ORIFICE #1 DIA 0.5 INCH, ELEV 185.19'		
SOIL TYPE: Type B	PIPE MATERIAL: HDPE		ORIFICE #2 DIA 0.8 INCH, ELEV 190.79'		

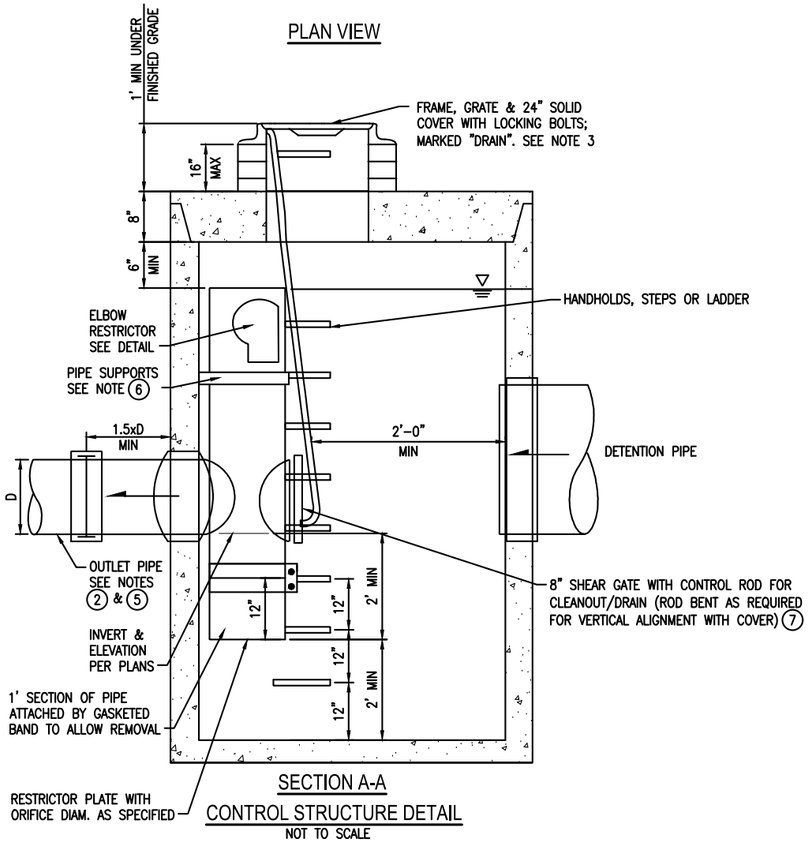

SECTION A-A

CONTROL STRUCTURE DETAIL

NOT TO SCALE

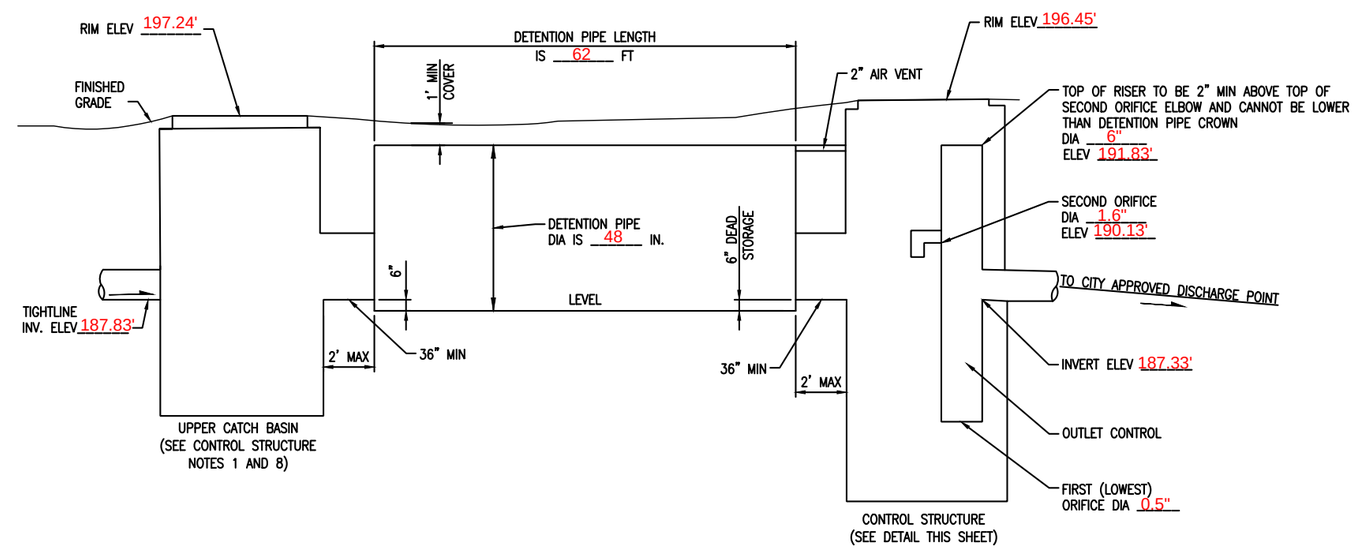

ON-SITE DETENTION SYSTEM

NOT TO SCALE (ENGINEER TO FILL IN BLANKS)

CONTROL STRUCTURE NOTES:

1. USE A MINIMUM OF A 54 IN. DIAM. TYPE 2 CATCH BASIN. THE ACTUAL SIZE IS DEPENDENT ON CONNECTING PIPE MATERIAL AND DIAMETER.
2. OUTLET PIPE: MIN. 6 INCH.
3. METAL PARTS: CORROSION RESISTANT. NON-GALVANIZED PARTS PREFERRED. GALVANIZED PIPE PARTS TO HAVE ASPHALT TREATMENT 1.
4. FRAME AND LADDER OR STEPS OFFSET SO:
   - A. CLEANOUT GATE IS VISIBLE FROM TOP;
   - B. CLIMB-DOWN SPACE IS CLEAR OF RISER AND CLEANOUT GATE;
   - C. FRAME IS CLEAR OF CURB.
5. IF METAL OUTLET PIPE CONNECTS TO CEMENT CONCRETE PIPE, OUTLET PIPE TO HAVE SMOOTH O.D. EQUAL TO CONCRETE PIPE I.D. LESS 1/4 IN.
6. PROVIDE AT LEAST ONE 3 X 0.090 GAUGE SUPPORT BRACKET ANCHORED TO CONCRETE WALL WITH 5/8 IN. STANLESS STEEL EXPANSION BOLTS OR EMBEDDED SUPPORTS 2 IN. INTO CATCH BASIN WALL (MAXIMUM 3'-0" VERTICAL SPACING).
7. THE SHEAR GATE SHALL BE MADE OF ALUMINUM ALLOY IN ACCORDANCE WITH ASTM B 26M AND ASTM B 275, DESIGNATION ZG32A; OR CAST IRON IN ACCORDANCE WITH ASTM A 48, CLASS 30B.
   THE LIFT HANDLE SHALL BE MADE OF A SIMILAR METAL TO THE GATE (TO PREVENT GALVANIC CORROSION), IT MAY BE OF SOLID ROD OR HOLLOW TUBING, WITH ADJUSTABLE HOOK AS REQUIRED.
   A NEOPRENE RUBBER GASKET IS REQUIRED BETWEEN THE RISER MOUNTING FLANGE AND THE GATE FLANGE.
   INSTALL THE GATE SO THAT THE LEVEL-LINE MARK IS LEVEL WHEN THE GATE IS CLOSED.
   THE MATING SURFACES OF THE LID AND THE BODY SHALL BE MACHINED FOR PROPER FIT.
   ALL SHEAR GATE BOLTS SHALL BE STAINLESS STEEL.
8. THE UPPER CATCH BASIN IS REQUIRED IF THE LENGTH OF THE DETENTION PIPE IS GREATER THAN 50 FT.

ON-SITE DETENTION SYSTEM NOTES:

1. CALL DEVELOPMENT SERVICES (206-275-7605) 24 HOURS IN ADVANCE FOR A DETENTION SYSTEM INSPECTION BEFORE BACKFILLING AND FOR FINAL INSPECTIONS.
2. RESPONSIBILITY FOR OPERATION AND MAINTANANCE OF DRAINAGE SYSTEMS ON PRIVATE PROPERTY IS RESPONSIBILITY OF THE PROPERTY OWNER. MATERIAL ACCUMULATED IN THE STORAGE PIPE MUST BE REMOVED FROM CATCH BASINS TO ALLOW PROPER OPERATION. THE OUTLET CONTROL ORIFICE MUST BE KEPT OPEN AT ALL TIMES.
3. PIPE MATERIAL, JOINT, AND PROTECTIVE TREATMENT SHALL BE IN ACCORDANCE WITH SECTION 7.04 AND 9.05 OF THE WSDOT STANDARD SPECIFICATION FOR ROAD, BRIDGE, AND MUNICIPAL CONSTRUCTION, LATEST VERSION. SUCH MATERIALS INCLUDE THE FOLLOWING, LINED CORRUGATED POLYETHYLENE PIPE (LCPE), ALUMINIZED TYPE 2 CORRUGATED STEEL PIPE AND PIPE ARCH (MEETS AASHTO DESIGNATIONS M274 AND M36), CORRUGATED OR SPIRAL RIB ALUMINUM PIPE, OR REINFORCED CONCRETE PIPE. CORRUGATED STEEL PIPE IS NOT ALLOWED.
4. FOOTING DRAINS SHALL NOT BE CONNECTED TO THE DETENTION SYSTEM.

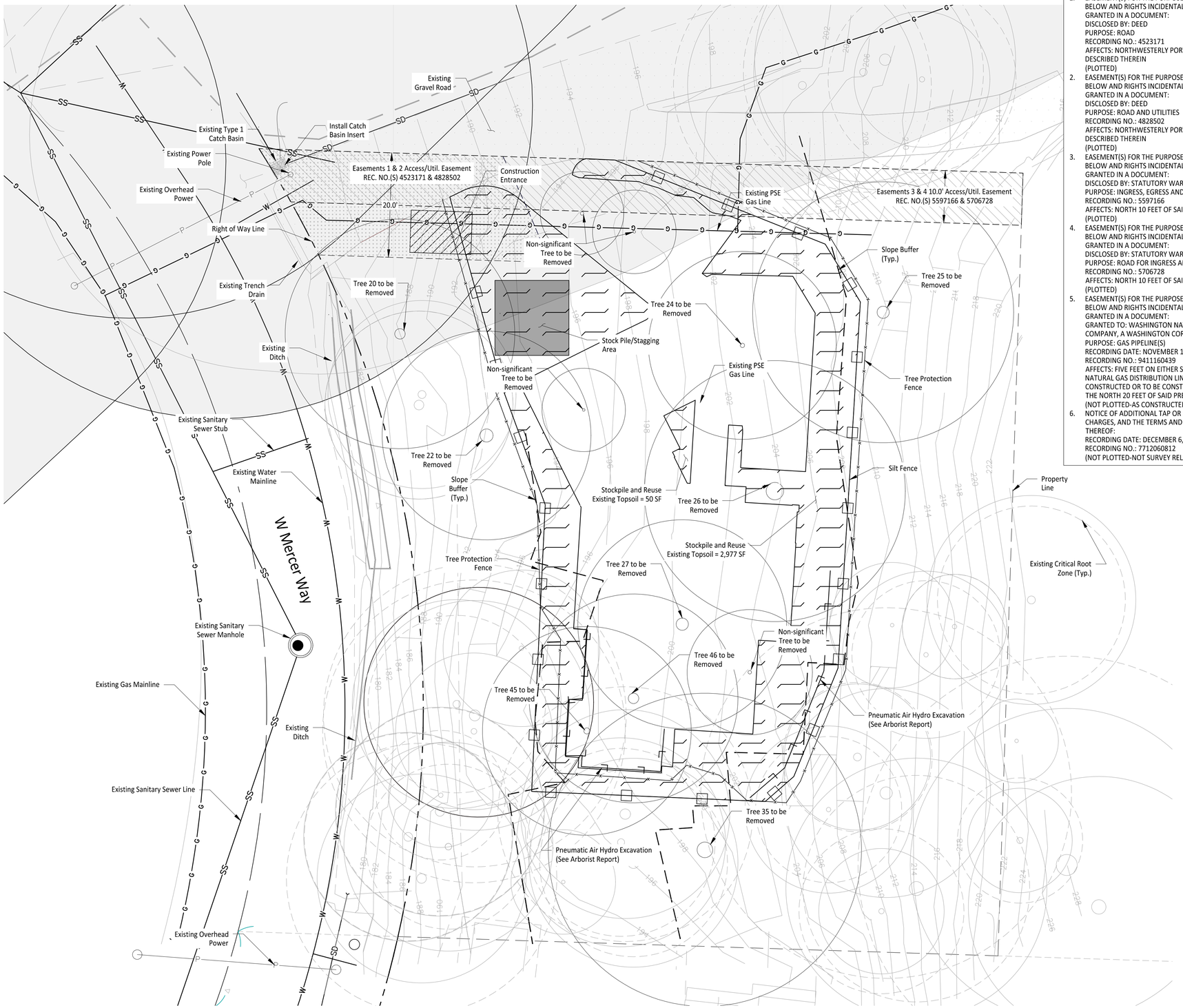

EASEMENTS

1. EASEMENT(S) FOR THE PURPOSE(S) SHOWN BELOW AND RIGHTS INCIDENTAL THERETO, AS GRANTED IN A DOCUMENT:
   DISCLOSED BY: DEED
   PURPOSE: ROAD
   RECORDING NO.: 4523171
   AFFECTS: NORTHWESTERLY PORTION AS DESCRIBED THEREIN
   (PLOTTED)
2. EASEMENT(S) FOR THE PURPOSE(S) SHOWN BELOW AND RIGHTS INCIDENTAL THERETO, AS GRANTED IN A DOCUMENT:
   DISCLOSED BY: DEED
   PURPOSE: ROAD AND UTILITIES
   RECORDING NO.: 4828502
   AFFECTS: NORTHWESTERLY PORTION AS DESCRIBED THEREIN
   (PLOTTED)
3. EASEMENT(S) FOR THE PURPOSE(S) SHOWN BELOW AND RIGHTS INCIDENTAL THERETO, AS GRANTED IN A DOCUMENT:
   DISCLOSED BY: STATUTORY WARRANTY DEED
   PURPOSE: INGRESS, EGRESS AND UTILITIES
   RECORDING NO.: 5597166
   AFFECTS: NORTH 10 FEET OF SAID PREMISES
   (PLOTTED)
4. EASEMENT(S) FOR THE PURPOSE(S) SHOWN BELOW AND RIGHTS INCIDENTAL THERETO, AS GRANTED IN A DOCUMENT:
   DISCLOSED BY: STATUTORY WARRANTY DEED
   PURPOSE: ROAD FOR INGRESS AND EGRESS
   RECORDING NO.: 5706728
   AFFECTS: NORTH 10 FEET OF SAID PREMISES
   (PLOTTED)
5. EASEMENT(S) FOR THE PURPOSE(S) SHOWN BELOW AND RIGHTS INCIDENTAL THERETO, AS GRANTED IN A DOCUMENT:
   GRANTED TO: WASHINGTON NATURAL GAS COMPANY, A WASHINGTON CORPORATION
   PURPOSE: GAS PIPELINE(S)
   RECORDING DATE: NOVEMBER 16, 1994
   RECORDING NO.: 9411160439
   AFFECTS: FIVE FEET ON EITHER SIDE OF THE NATURAL GAS DISTRIBUTION LINE AS CONSTRUCTED OR TO BE CONSTRUCTED WITHIN THE NORTH 20 FEET OF SAID PREMISES
   (NOT PLOTTED-AS CONSTRUCTED)
6. NOTICE OF ADDITIONAL TAP OR CONNECTION CHARGES, AND THE TERMS AND CONDITIONS THEREOF:
   RECORDING DATE: DECEMBER 6, 1977
   RECORDING NO.: 7712060812
   (NOT PLOTTED-NOT SURVEY RELATED)

TESC NOTES

- Contractor to install temporary erosion and sediment control measures as necessary to ensure stormwater leaving the site is free of settleable solids.
- Roads shall be cleaned thoroughly as needed to protect stormwater infrastructure and downstream water resources. Sediment shall be removed from roads by shoveling or pickup sweeping and be transported to a controlled sediment disposal area.
- Install strom drain inlet protection in all existing catch basins within the project vicinity per City of Mercer Island Detail 4.2.8.
- Install Stabilized Construction Entrance per City of Mercer Island Detail 4.1.1.
- Install Silt Fence as necessary. See City of Mercer Island Detail 4.2.12.
- Install straw bale barriers, wattles and other TESC measures as necessary.
- Exposed soils shall be watered as necessary to prevent dust from leaving the site.
- Contractor to mark clearing limits with lath and flagging.
- Concrete handling and equipment washing shall in accordance with DOE BMP C151.

GENERAL NOTES

- See Tree Inventory Tables in Arborist Report included in this submittal.

CONSTRUCTION NOTES

- The lawn and landscape areas are required to provide Post-Construction Soil Quality and Depth in accordance with BMP T5.13. The project civil engineer must provide a letter of certification to ensure that lawn and landscape areas are Depth Requirements specified on the approved plan set prior to final inspection of the project.
- POST-CONSTRUCTION SOIL MANAGEMENT

1. Retain & Protect Native Vegetation and Soil
   1.1. Identify Areas of the site that will not be disturbed construction. Fence areas to prevent impacts during construction.

2. loosen Compacted Subsoil
   2.1. In Areas Compacted by Construction Traffic Scarify the top 4-inches of subsoil. Use a Cat-mouted Ripper,tractor-mounted disc, or tiller to mix the first lift of topsoil into the subsoil. USe the equipment listed to scarify soils to a depth of 12-inches before tilling in at least 8-inches of compost.

3. Restore Soils that are Disturbed During Construction
   3.1. Stockpile and reuse existing topsoil (amend if needed to meet 5% organic matter content for turf areas; 10% organic matter content for planting beds).

4. Add Mulch to Planting Beds
   4.1. Spread mulch (coarse bark or wood chips) in the spring or fall (after planting) to control weeds, reduce the need for irrigation and prevent erosion). Apply 1 to 2 inches of mulch on planting beds and around shallow-rooted annuals. Apply 2 to 4 inches of mulch around trees and woody perennials, but make sure to keep mulch 2-3 inches away from tree trunks.

5. Protect Restored Soils from Erosion anad Re-Compaction
   5.1. Prevent runoff from roads or open slopes onto amended soil areas. Compost blankets are an approved erosion control Best Management Practice (BMP) that can be used during construction and then tilled into existing soil at the end of the construction process prior to planting. Once soils have been amended, vehicle traffic should be prohibited to prevent recompilation from occurring.

LEGEND

- Tree Protection Fence
- Trees to be Removed
- Protect and Maintain Existing Trees

CALL TWO BUSINESS DAYS BEFORE YOU DIG
1-800-424-5555
UTILITIES UNDERGROUND LOCATION CENTER

Owner/Developer:
Edward & Catherine Moran
5000 West Mercer Way
Mercer Island, WA 98040

Architect:
Plan One Fine Home Design
5125 47th Ave S
Seattle, WA 98118
206-612-8511

Engineer:
JJTEAM
Justin Jones, PE
PO Box 2066
Sumner, WA 98390
(206) 596-2020

Project:
Moran Residence

ONE INCH AT FULL SCALE.
IF NOT, SCALE ACCORDINGLY

JUSTIN M. JONES
STATE OF WASHINGTON
41829
REGISTERED PROFESSIONAL ENGINEER
12-16-2022

REV	DATE	DESCRIPTION

SHEET TITLE:
Existing Site & TESC Plan

PROJ. NO: 1576001
DATE: December 16, 2022
DRAWN BY:
DESIGN BY:
SHEET NUMBER:
C-01
DWG.

File: 1576001C-EX.dwg Path: J:\1576 - Moran\001 - W Mercer Way\CAD\ Plotted by: JMJ Date: 20-Dec-22 2:19:34pm

LEGEND

- Proposed Concrete
- Proposed Concrete with Brushed Surface
- Proposed Permeable Pavers
- Landscaping/Native Vegetation

GENERAL NOTES

- See Detail on Sheet C-05 for Standard Concrete Section.
- See Detial on Sheet C-05 for Permeable Paver Section.
- Driveway Slopes over 20.0% add a Brush Surface Finish to increase Traction.

LOT COVERAGE

Proposed Lot Coverage		
	Impervious Areas (SF)	Pervious Areas (SF)
Proposed House	2,664	
Proposed Driveway	1,312	
Proposed Retaining Walls	63	
Permeable Pavers		116
Landscaping/Vegetaion		13,722
Totals	4,039	13,838
Lot Size	18,295	
Max Allowed Impervious Coverage	35% (6,403 SF)	
Impervious Lot Coverage	22%	

CALL TWO BUSINESS DAYS BEFORE YOU DIG
1-800-424-5555
UTILITIES UNDERGROUND LOCATION CENTER

Owner/Developer:

Edward & Catherine Moran
5000 West Mercer Way
Mercer Island, WA 98040

Architect:

Plan One Fine Home Design
5125 47th Ave S
Seattle, WA 98118
206-612-8511

Engineer:

JUSTEAM

Justin Jones, PE
PO Box 2066
Sumner, WA 98390
(206) 596-2020

Project:

Moran Residence

ONE INCH AT FULL SCALE.
IF NOT, SCALE ACCORDINGLY

JUSTIN M. JONES
STATE OF WASHINGTON
41829
REGISTERED PROFESSIONAL ENGINEER

12-16-2022

REV	DATE	DESCRIPTION

SHEET TITLE.

Site & Grading Plan

PROJ. NO: 1576001

DATE: December 16, 2022

DRAWN BY:

DESIGN BY:

SHEET NUMBER.

C-02

DWG.

File: 1576001C-SP.dwg Path: J:\1576 - Moran\001 - W Mercer Way\CAD\ Plotted by: JMJ Date: 20-Dec-22 2:23:39pm

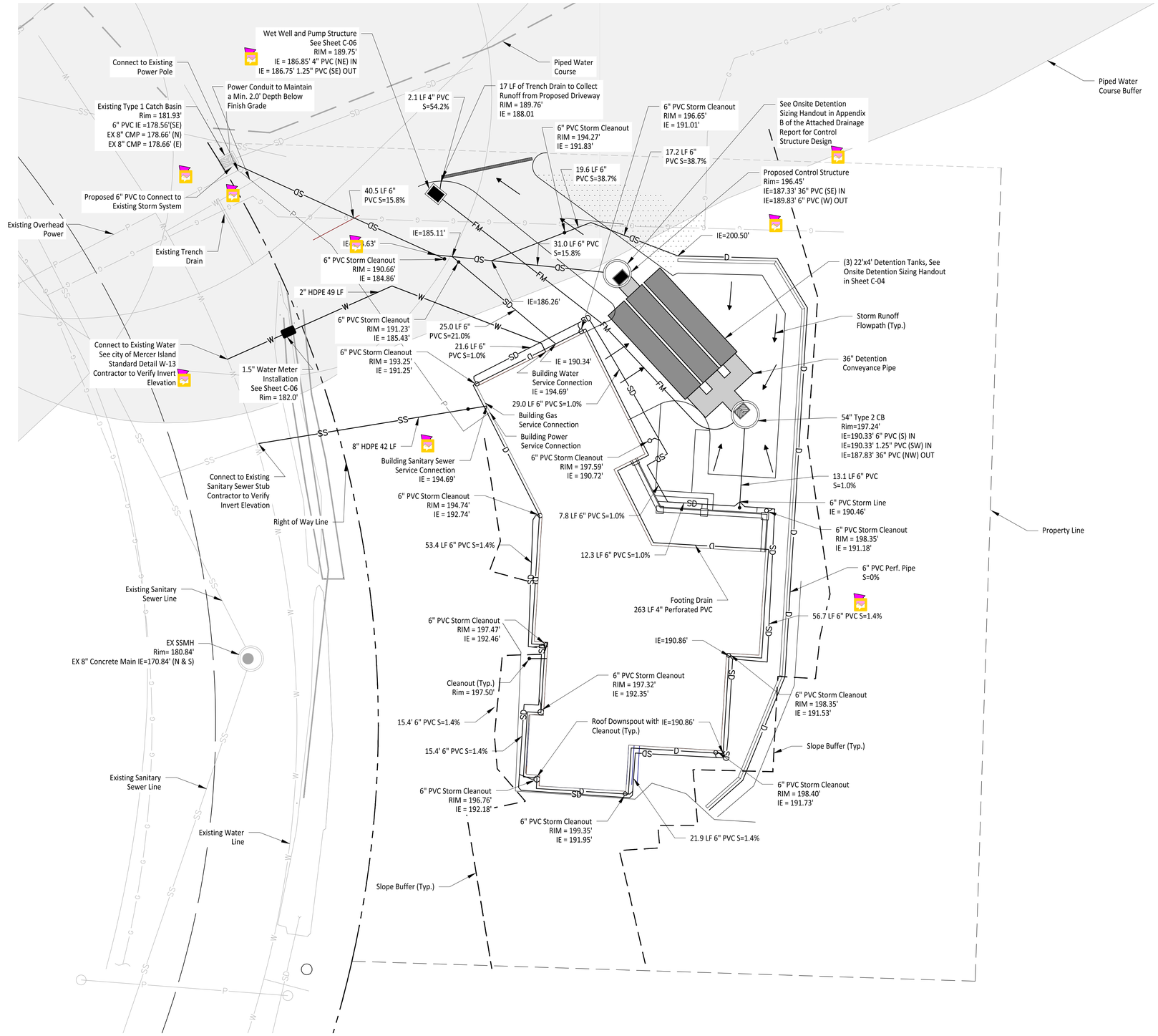

LEGEND

SS	Sanitary Sewer Line
W	Water Line
P	Power Conduit
SD	Stormwater Line

CONSTRUCTION NOTES

- ASTM 3034 SDR 35 PVC pipe, fused solid wall HDPE, schedule 40 ABS, DIP or CIP (up to 8 ft. depth). Over 8 ft. depth and slopes more than 20%, DIP, CIP, or fused solid wall HDPE are required.
- Bedding material for open cut construction must be pea gravel, sand, control density fill (CDF), or 5/8" minus C.R.
- Select backfill material shall be 5/8" minus C.R. or control density fill (CDF).
- Imported backfill material shall be bank run gravel or pit run gravel from an approved supplier meeting APWA/WSDOT gradation specifications. Not allowed in right-of-way.
- Rubber gaskets must be used when appropriate.
- Rigid couplings must be used forconnections to existing stubs in right-of-way.
- A stainless steel strap and saddle (Romac) must be used for coring.
- 1" Water Meter Installation see City of Mercer Island Detail on sheet C-06.
- Tapping Tee Installation see City of Mercer Island Detail on sheet C-06.
- The lawn and landscape areas are required to provide Post-Construction Soil Quality and Depth in accordance with BMP T5.13. The project civil engineer must provide a letter of certification to ensure that the lawn and landscape areas are meeting the Post-Construction Soil Quality and Depth Requirements specified on the approved plan set prior to final inspection of the project.

GENERAL NOTES

- Water Service laterals shall have a minimum cover of 12 inches.
- Roof leader locations to be verified by contractor prior to construction.
- Storm pipes to maintain a minimum cover of 1.5' from finish grade.
- Storm pipes to be SDR 35 PVC piping.
- Sanitary Sewer laterals to be soild wall HDPE piping.
- Saniatry Sewer Laterals to mantain a minimum cover of 3.0' from finish grade.
- Pipes entering and exiting catch basins a tee section or bent elbow must be installed for spill control.
- Power conduit shall maintain a minimum cover of 2.0' from finish grade.
- Franchise utilities shown on this plan are into reviewed or approved by the City of Mercer Island.
- The TV inspection of the existing side sewer. If the result of the TV inspection is not in satisfactory condition, as determined by the City of Mercer Island Inspector, the replacement of the existing side sewer is required.

CALL TWO BUSINESS DAYS BEFORE YOU DIG
1-800-424-5555
UTILITIES UNDERGROUND LOCATION CENTER

Owner/Developer:
Edward & Catherine Moran
5000 West Mercer Way
Mercer Island, WA 98040

Architect:
Plan One Fine Home Design
5125 47th Ave S
Seattle, WA 98118
206-612-8511

Engineer:
JUTEAM
Justin Jones, PE
PO Box 2066
Sumner, WA 98390
(206) 596-2020

Project:
Moran Residence

ONE INCH AT FULL SCALE.
IF NOT, SCALE ACCORDINGLY

JUSTIN M. JONES
STATE OF WASHINGTON
41829
REGISTERED PROFESSIONAL ENGINEER
12-16-2022

REV	DATE	DESCRIPTION

SHEET TITLE:
Utility Plan

PROJ. NO: 1576001
DATE: December 16, 2022
DRAWN BY:
DESIGN BY:
SHEET NUMBER:
C-03
DWG.

File: 1576001C-STRM.dwg Path: J:\1576 - Moran\001 - W Mercer Way\CAD\ Plotted by: JMJ Date: 20-Dec-22 2:26:24pm

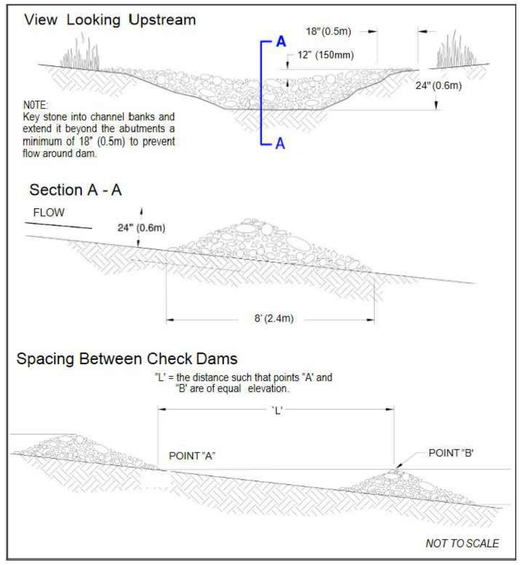

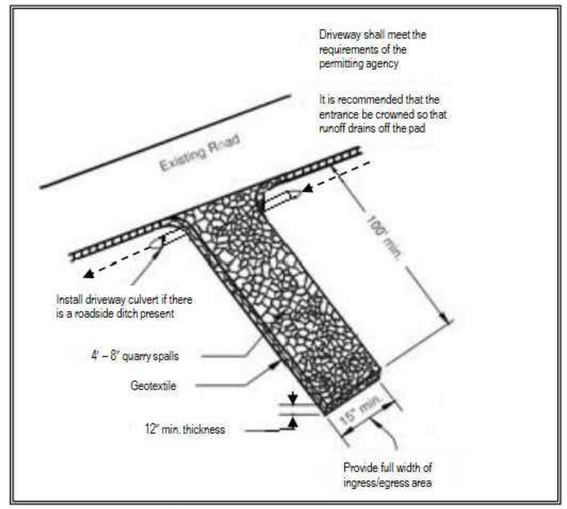

Figure 4.1.1 – Stabilized Construction Entrance

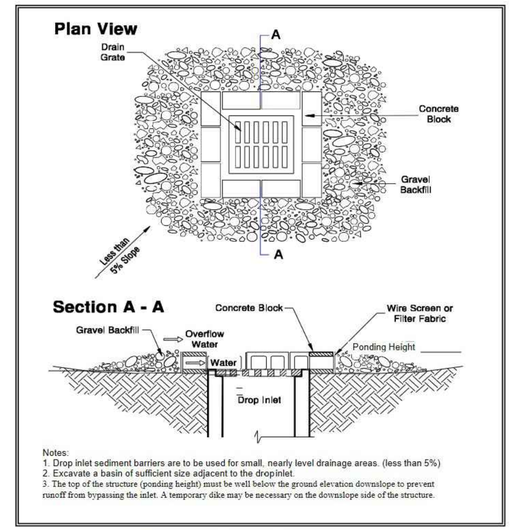

Figure 4.2.8 – Block and Gravel Filter

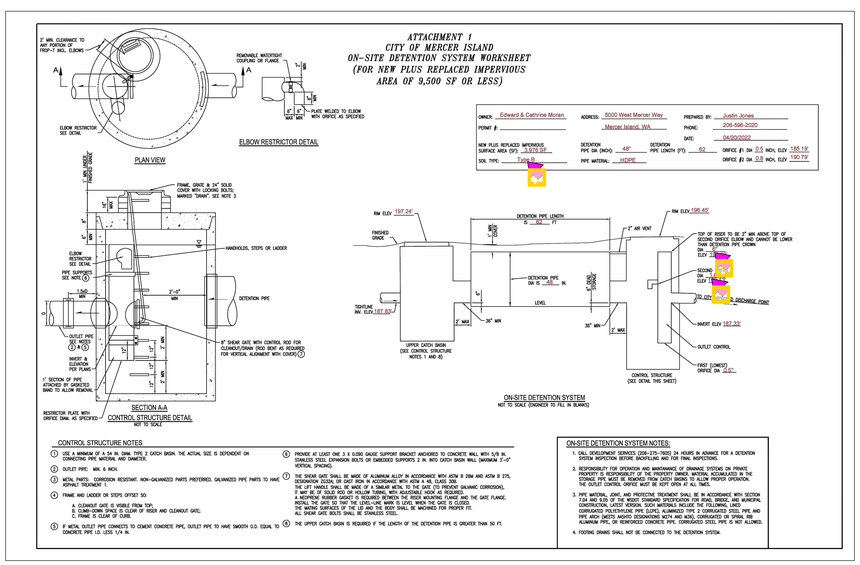

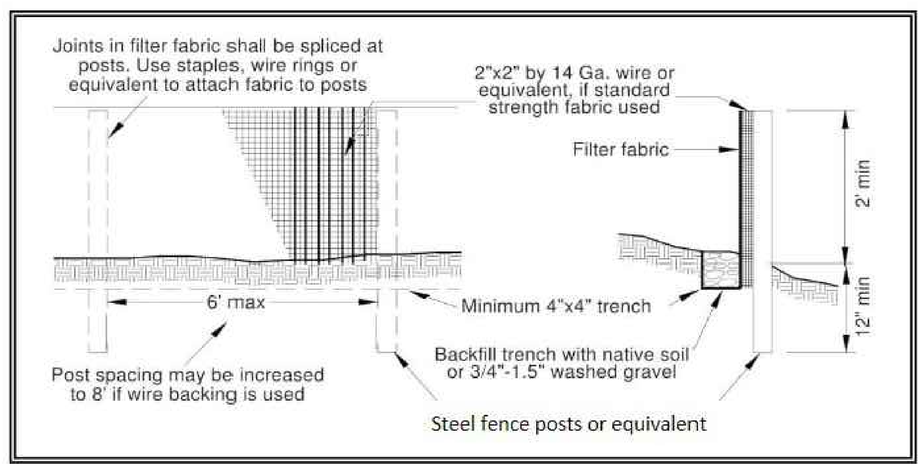

Figure 4.2.12 – Silt Fence

CALL TWO BUSINESS DAYS BEFORE YOU DIG
1-800-424-5555
UTILITIES UNDERGROUND LOCATION CENTER

Owner/Developer:

Edward & Catherine Moran
5000 West Mercer Way
Mercer Island, WA 98040

Architect:

Plan One Fine Home Design
5125 47th Ave S
Seattle, WA 98118
206-612-8511

Engineer:

JUTEAM
Justin Jones, PE
PO Box 2066
Sumner, WA 98390
(206) 596-2020

Project:

Moran Residence

ONE INCH AT FULL SCALE.
IF NOT, SCALE ACCORDINGLY

JUSTIN M. JONES
STATE OF WASHINGTON
41829
REGISTERED PROFESSIONAL ENGINEER
12-16-2022

REV	DATE	DESCRIPTION

SHEET TITLE:

Details

PROJ. NO: 1576001

DATE: December 16, 2022

DRAWN BY:

DESIGN BY:

SHEET NUMBER:

C-04

DWG.

File: 1576001C-DT.dwg Path: J:\1576 - Moran\001 - W Mercer Way\CAD\ Plotted by: JMJ Date: 19-Dec-22 3:21:23pm

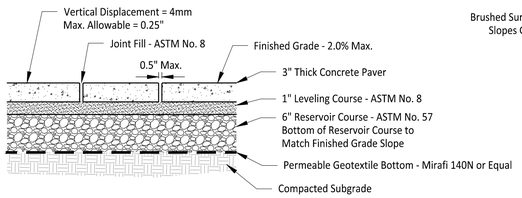

PERMEABLE PAVERS
SECTION A
1" = 1' C-06

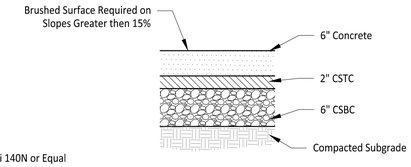

CONCRETE DRIVEWAY
SECTION B
1" = 1' C-06

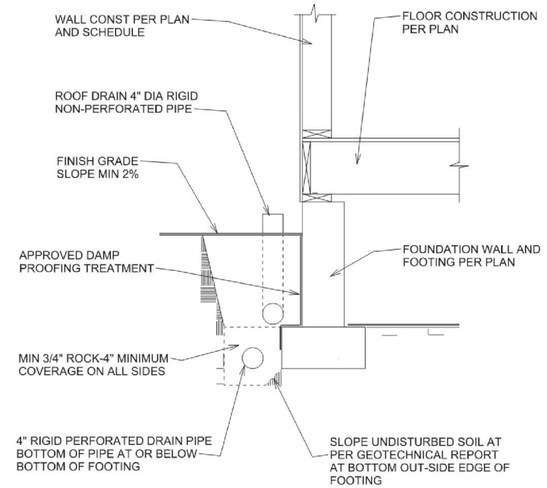

FOOTING DRAIN DETAIL
SECTION B
3/4" = 1' C-06

TREE PROTECTION AREA (TPZ)

KEEP OUT!

DO NOT REMOVE OR ADJUST THE APPROVED LOCATION OF THIS TREE PROTECTION AREA

Trees enclosed by this fence are protected and are subject to the conditions of the tree permit. Violation of tree conditions may lead to:

1. Correction Notices or Stop Work Orders until compliance is achieved
2. RE Inspection Fees
3. Arborist reports recommending mitigation

Notes

1. No pruning shall be preformed unless under the direction of an arborist
2. No equipment shall be stored or operated inside the protective fencing including during fence installation and removal
3. No storage of materials shall occur inside the protective fencing
4. Refer to Site/Utility Plan for allowable modifications to the tree protection area.
5. Unauthorized activities in tree protection area may require evaluation by private arborist to identify impacts and mitigation required
6. Exposed roots: For roots > 1" damaged during construction, make a clean straight cut to remove damaged portion and inform City Arborist

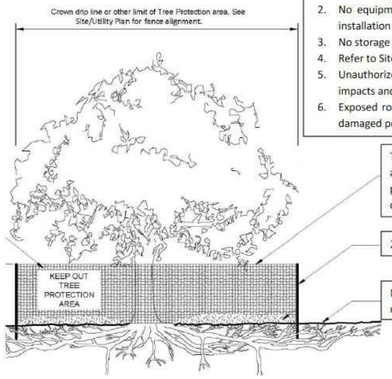

Tree protection fence: 4-6" chain link fence, solidly anchored into the ground, or if authorized High-density polyethylene fencing with 3.5" x 1.5" openings; color orange. Steel posts installed at 8' o.c.

2" x 6" steel posts or approved equal

Maintain existing grade with the tree protection fence unless otherwise indication on the plans

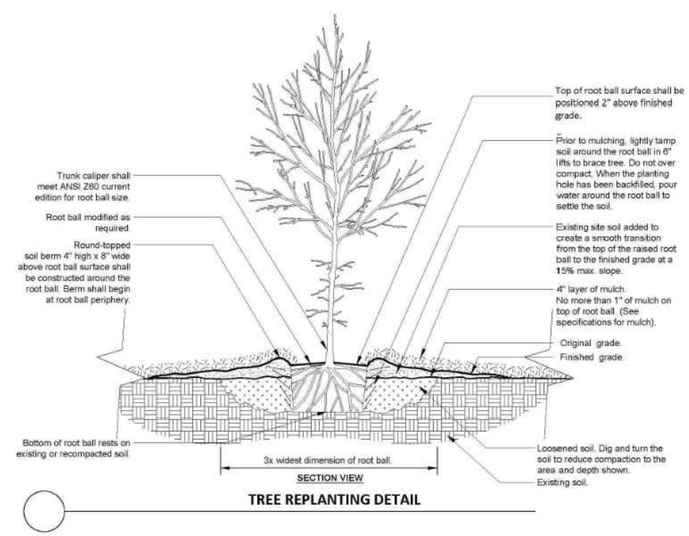

TREE REPLANTING DETAIL

CALL TWO BUSINESS DAYS
BEFORE YOU DIG
1-800-424-5555
UTILITIES UNDERGROUND LOCATION CENTER

Owner/Developer:

Edward & Catherine Moran
5000 West Mercer Way
Mercer Island, WA 98040

Architect:

Plan One Fine Home Design
5125 47th Ave S
Seattle, WA 98118
206-612-8511

Engineer:

JJ TEAM
Justin Jones, PE
PO Box 2066
Sumner, WA 98390
(206) 596-2020

Project:

Moran Residence

ONE INCH AT FULL SCALE.
IF NOT, SCALE ACCORDINGLY

JUSTIN M. JONES
STATE OF WASHINGTON
41829
REGISTERED
PROFESSIONAL ENGINEER
12-16-2022

REV	DATE	DESCRIPTION

SHEET TITLE:

Details

PROJ. NO: 1576001

DATE: December 16, 2022

DRAWN BY:

DESIGN BY:

SHEET NUMBER:

C-05

DWG.

File: 1576001C-01.dwg Path: J:\1576 - Moran\001 - W Mercer Way\Cd\ Plotted by: JMJ Date: 14-Dec-22 3:52:26pm

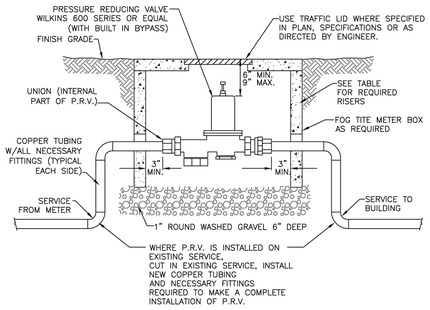

P.R.V. SIZE	FOG TITE METER BOX NO.	RISER REQUIRED
2"	2	12"
1-1/2"	2	12"
1-1/4"	1	6"
1"	1	6"
3/4"	1	4"
1/2"	1	4"

NOTES

1. P.R.V. SHALL HAVE AN INTEGRAL BYPASS.

CITY OF MERCER ISLAND
STANDARD DETAILS
WATER
RESIDENTIAL
PRESSURE REDUCING VALVE

12-24-2013	NO SCALE	W-28

REV DATE | APPROVED

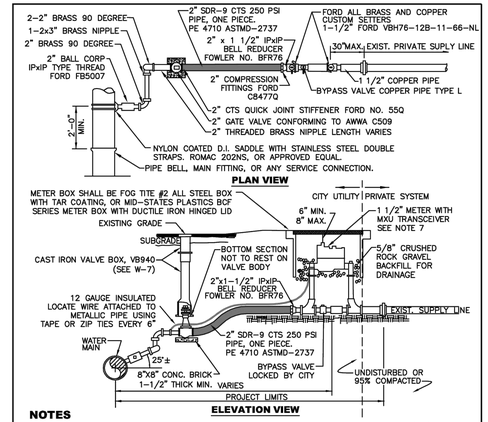

NOTES

1. WATER SERVICES SHALL COMPLY WITH THE REDUCTION OF LEAD IN DRINKING WATER ACT DATED 01/04/2014.
2. MINIMUM DISTANCE BETWEEN CORP STOPS SHALL BE 18'. MINIMUM DISTANCE BETWEEN TAPS, BETWEEN CORP STOP AND PIPE ENDS SHALL BE 24", ALL HORIZONALLY STAGGERED.
3. PLASTIC METER BOXES SHALL NOT BE INSTALLED WITHIN ROADWAY, SIDEWALK, OR DRIVEWAYS.
4. UPON CITY ENGINEER'S APPROVAL, METER BOXES ARE ALLOWED TO BE INSTALLED IN PORTLAND CEMENT CONCRETE PAVEMENT OR SIDEWALK.
5. WHEN CONNECTING TO EXISTING PRIVATE SUPPLY LINE CONTAINING FERROUS METAL, PROVIDE INSULATING COUPLING (DB SERIES WITH C21 SERIES ADAPTERS) AND PROVIDE REDUCER AS NECESSARY TO MATCH EXISTING PRIVATE SUPPLY LINE DIAMETER.
6. SERVICE LINE SHALL BE PERPENDICULAR TO THE WATER MAIN AND STRAIGHT TO WATER METER, UNLESS OTHERWISE APPROVED BY CITY ENGINEER. PROVIDE WINDING SLACK IN THE SERVICE LINE BETWEEN THE MAIN AND WATER METER.
7. WATER METER SUPPLIED BY CITY.
8. ALL FITTINGS TO BE BRASS COMPRESSION TYPE, FORD QUICK JOINT OR EQUAL.
9. NO SERVICE CONNECTIONS BETWEEN BLOW-OFF AND END OF MAIN.

CITY OF MERCER ISLAND
STANDARD DETAILS
WATER
1-1/2" WATER
METER INSTALLATION

02-05-2021	NO SCALE	W-14

REV DATE | APPROVED

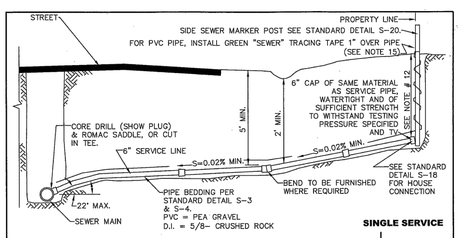

SINGLE SERVICE

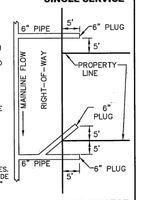

DOUBLE SERVICE

NOTES

1. ELBOWS SHALL NOT BE GREATER THAN 45 DEGREES.
2. CLEAN OUT IS REQUIRED FOR EACH PIPE LENGTH GREATER THAN 100' AND FOR EACH 90° ACCUMULATED ELBOW/100'.
3. RIGHT-OF-WAY RESTORATION SHALL MATCH OR EXCEED THE ORIGINAL CONDITION AND BE IN ACCORDANCE WITH CITY STANDARDS.
4. ALL TRENCH BACKFILL IN PUBLIC RIGHT-OF-WAY OR ROADWAY AREAS SHALL BE CRUSHED SURFACING PER WSDOT 9-09.9(3) OR BANK RUN GRAVEL PER WSDOT 9-03.19, COMPACTED IN 6" LIFTS OR MAY BE CDF WHEN DIRECTED BY THE CITY ENGINEER (SEE DETAIL S-3).
5. LAY PIPE IN STRAIGHT LINE BETWEEN BENDS. MAKE ALL CHANGES IN GRADE OR LINE WITH 1/8 BEND OR WYE. 90° CHANGE WITH 1/8 BEND AND WYE.
6. 6" SEWER PIPE MINIMUM SIZE IN RIGHT-OF-WAY, AND ELSEWHERE AS DIRECTED BY ENGINEER. 2% MIN. GRADE (UNLESS DIRECTED BY ENGINEER), 50% MAXIMUM.
7. ALL A.C. MAINS TO BE TAPPED IN ACCORDANCE WITH WAC 296-62-00775 STATE/FEDERAL GUIDELINES AND CERTIFICATION.
8. CONSTRUCTION IN RIGHT-OF-WAY MUST BE DONE BY A REGISTERED AND LICENSED CONTRACTOR.
9. ALL CONSTRUCTION SHALL BE IN ACCORDANCE WITH CURRENT CITY SEWER ORDINANCES.
10. WHERE CITY ENGINEER ALLOWS SIDE SEWER CONNECTIONS TO MANHOLE, INVERT OF SIDE SEWER SHALL BE EQUAL TO OR ABOVE MAIN SEWER CROWN, BUT NOT TO EXCEED 18" ABOVE INVERT OF MAIN SEWER.
11. UNLESS OTHERWISE INDICATED ON PLAN, SIDE SEWER SHALL BE MIN. OF 6' DEEP AT PROPERTY LINE, OR 5' LOWER THAN THE LOWEST ELEVATION, WHICH EVER IS LOWER.
12. ALL PIPE MATERIALS NOT TO STANDARDS WILL BE ABANDONED AND REPLACED WITH DUCTILE IRON OR PVC PIPE OF THE SAME SIZE.
13. IF A BUILDING SEWER IS TO SERVE MORE THAN ONE PROPERTY, BY JOINT AGREEMENT OF THE OWNERS, AN APPROVED EASEMENT INSURING THAT ALL PROPERTIES INVOLVED SHALL HAVE PERPETUAL USE OF THE SIDE SEWER, HAVING PROVISIONS FOR OPERATION, MAINTENANCE, RECONSTRUCTION AND FOR ACCESS FOR REPAIR PURPOSES, SHALL BE SIGNED BY THE OWNERS. THIS EASEMENT SHALL BE RECORDED WITH THE COUNTY AUDITOR. A SIX INCH (MINIMUM) DIAMETER PIPE SHALL BE USED FOR THE COMMON LINE AND A SIX INCH CLEANOUT EXTENDING TO WITHIN 12 INCHES OF THE GROUND SURFACE SHALL BE PROVIDED AT THE WYE WHERE THE UPPER GRADE CONNECTIONS ARE MADE. BACKWATER VALVES SHALL BE INSTALLED ON SERVICE LINES UPSTREAM OF THE CONNECTION TO THE SHARED SIDE SEWER.
14. THE CITY ENGINEER MAY REQUIRE BACKWATER VALVES ON SIDE SEWERS WHEN DEEMED NECESSARY. THE EFFECTIVE OPERATION AND MAINTENANCE OF ANY BACKWATER VALVE SHALL BE THE RESPONSIBILITY OF THE OWNER OF THE SIDE SEWER.
15. UTILITY PIPE TRACER TAPE SHALL BE DETECTABLE BELOW GROUND SURFACE, COLOR CODED, WITH UTILITY NAME PRINTED ON TAPE. CONDUCTIVE WARNING TAPE REQUIRED OVER ALL WATER PIPE. TAPE SHALL BE MANUFACTURER'S STANDARD PERMANENT, BRIGHT-COLORED, CONTINUOUS PRINTED PLASTIC TAPE, ALUMINUM BACKED, INTENDED FOR DIRECT-BURIAL SERVICE. TAPE SHALL BE NOT LESS THAN 6" WIDE X 4 MILS THICK.

CITY OF MERCER ISLAND
STANDARD DETAILS
SEWER
SIDE SEWER CONNECTION AND STUB

6-5-2009	NO SCALE	S-17

REV DATE | APPROVED

2400-Series

Features

- 2 hp Grinder Pump
- Choose from LSG or LSGX-Series pumps
- Available in a wide range of voltages
- 1-1/4" Discharge
- 25' Power cable length

(See LSG or LSGX-Series literature for complete pump specifications.)

Performance Curve

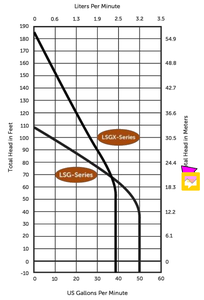

Dimensional Data

Top View

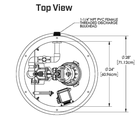

Side View

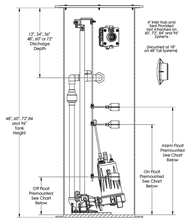

Float levels are adjustable per included instructions

Galvanized guide rails standard.
For stainless-steel rails add "S" to model number.
Example: 2472LSG24-S
For steel cover-option add "-SC" suffix to model number.
Example: 2472LSG24-SC

Factory Set Control Levels

MODEL	OFF LEVEL	ON LEVEL	ALARM LEVEL	VOLUME PER PUMP CYCLE	TOTAL BASIN CAPACITY
2448	9.5" (24 cm)	16.5" (42 cm)	21" (53 cm)	13.5 gal (51 liters)	94 gal (356 liters)
2460	13" (33 cm)	27" (69 cm)	33" (84 cm)	27 gal (102 liters)	118 gal (447 liters)
2472	13" (33 cm)	31" (79 cm)	37" (94 cm)	35 gal (132 liters)	141 gal (534 liters)
2484	13" (33 cm)	33" (84 cm)	39" (99 cm)	39 gal (148 liters)	165 gal (625 liters)
2496	13" (33 cm)	37" (94 cm)	43" (109 cm)	47 gal (178 liters)	188 gal (712 liters)

CALL TWO BUSINESS DAYS BEFORE YOU DIG
1-800-424-5555
UTILITIES UNDERGROUND LOCATION CENTER

Owner/Developer:

Edward & Catherine Moran
5000 West Mercer Way
Mercer Island, WA 98040

Architect:

Plan One Fine Home Design
5125 47th Ave S
Seattle, WA 98118
206-612-8511

Engineer:

JONJTEAM

Justin Jones, PE
PO Box 2066
Sumner, WA 98390
(206) 596-2020

Project:

Moran Residence

ONE INCH AT FULL SCALE.
IF NOT, SCALE ACCORDINGLY

JUSTIN M. JONES
STATE OF WASHINGTON
41829
REGISTERED
PROFESSIONAL ENGINEER
12-16-2022

REV	DATE	DESCRIPTION

SHEET TITLE:

Details

PROJ. NO: 1576001

DATE: December 16, 2022

DRAWN BY:

DESIGN BY:

SHEET NUMBER:

C-06

DWG.

File: 1576001C-DT.dwg Path: J:\1576 - Moran\001 - W Mercer Way\CAD\ Plotted by: JMJ Date: 20-Dec-22 10:20:42am